Protected by copyright. Copying for private or commercial purposes, in part or in whole, is not permitted unless authorised by Volkswagen AG. Volkswagen AG does not guarantee or accept any liability with respect to the correctness of information in this document. Copyright by Volkswagen AG.

# Polo 1995 ➤

## Electrical system

Edition 10.1999

satelettronica

# List of Workshop Manual Repair GroupsList of Workshop Manual Repair GroupsList of Workshop Manual Repair Groups

## Polo 1995 ➤

## Electrical system

### Repair Group

27 - Starter, Current supply
90 - Gauges, Instruments
92 - Windscreen wipe and wash system
94 - Lights, Lamps, Switches - exterior
96 - Lights, Lamps, Switches - interior
97 - Wiring

Protected by copyright. Copying for private or commercial purposes, in part or in whole, is not permitted unless authorised by Volkswagen AG. Volkswagen AG does not guarantee or accept any liability with respect to the correctness of information in this document. Copyright by Volkswagen AG.

satelettronica

Technical information should always be available to the foremen and mechanics, because their careful and constant adherence to the instructions is essential to ensure vehicle road-worthiness and safety. In addition, the normal basic safety precautions for working on motor vehicles must, as a matter of course, be observed.

All rights reserved.
No reproduction without prior agreement from publisher.

Copyright © 2010 Volkswagen AG, Wolfsburg

00050205020

# Contents

27 - Starter, Current supply . . . . . 1
1 Battery . . . . . 1
1.1 Battery . . . . . 1
1.2 Battery contents list . . . . . 1
1.3 Fundamentals for batteries . . . . . 1
1.4 Battery handling instructions . . . . . 2
1.5 Batteries with condition indicator . . . . . 3
1.6 Visual check . . . . . 4
1.7 Checking electrolyte level (batteries with condition indicator) . . . . . 4
1.8 Batteries without condition indicator . . . . . 5
1.9 Checking electrolyte level . . . . . 6
1.10 Checking specific gravity . . . . . 8
1.11 Battery discharge (load) test . . . . . 10
1.12 Battery charging . . . . . 11
1.13 Removing and installing battery . . . . . 12
1.14 Explanation of central gas venting . . . . . 17
2 Starter . . . . . 18
2.1 Starter . . . . . 18
2.2 Removing and installing starter (petrol engine) . . . . . 18
2.3 Removing and installing starter (diesel engine) . . . . . 21
3 Removing and installing alternator with ribbed belt . . . . . 22
3.1 Removing and installing alternator with ribbed belt . . . . . 22
3.2 4-cylinder fuel injection engine with basic belt drive, vehicles > 04.99 . . . . . 23
3.3 4-cylinder fuel injection engine with basic belt drive, vehicles 05.99 > . . . . . 26
3.4 4-cylinder fuel injection engine with power-assisted steering, vehicles > 04.99 . . . . . 29
3.5 4-cylinder fuel injection engine with power-assisted steering, vehicles 05.99 > . . . . . 32
3.6 4-cylinder fuel injection engine with air conditioner compressor and power-assisted steering, vehicles > 04.99 . . . . . 36
3.7 4-cylinder fuel injection engine with power-assisted steering and air conditioner compressor, vehicles 05.99 > . . . . . 39
3.8 4-cyl. diesel engine, vehicles > 04.99 . . . . . 43
3.9 4-cyl. diesel engine vehicles 05.99 > . . . . . 45
3.10 3-Cyl. Diesel engine . . . . . 47
3.11 Ribbed belt drive . . . . . 49
3.12 Checking V-belt . . . . . 51
3.13 Checking ribbed belt . . . . . 52
3.14 Removing and installing ribbed belt . . . . . 52
3.15 Compact alternator with ribbed belt drive, vehicles >04.99 . . . . . 56
3.16 Checking alternator carbon brushes, vehicles >04.99 . . . . . 57
3.17 Removing and installing voltage regulator for alternator, vehicles > 04.99 . . . . . 57
3.18 Compact alternator with ribbed belt drive, vehicles 05.99 > . . . . . 58
3.19 Checking alternator carbon brushes, vehicles 05.99 > . . . . . 58
3.20 Removing and installing voltage regulator for alternator, vehicles 05.99 > . . . . . 59
3.21 Replacing alternator ribbed belt pulley . . . . . 59
3.22 Removing and installing ribbed belt pulley with freewheel . . . . . 60

90 - Gauges, Instruments . . . . . 63
1 Dash panel insert for vehicles > 1997 . . . . . 63
1.1 Dash panel insert for vehicles > 1997 . . . . . 63
1.2 Removing and installing dash panel insert . . . . . 63
1.3 Renewing bulbs in dash panel insert (VDO) . . . . . 64
1.4 Renewing bulbs in dash panel insert (MOTOMETER) . . . . . 67
1.5 Dash panel insert (MOTOMETER) warning lamp symbols . . . . . 69
1.6 Connector contact assignment on dash panel insert . . . . . 71

Copyright by Volkswagen AG. Volkswagen AG does not guarantee or accept any liability with respect to the correctness of information in this document. Copying for private or commercial purposes, in part or in whole, is not permitted unless authorised by Volkswagen AG.
satelettronica

1.7 Checking voltages and bulbs with test box V.A.G. 1598 . . . 72
**2 Dash panel insert for vehicles 1998 > . . . 73**
2.1 Dash panel insert for vehicles 1998 > . . . 73
2.2 Removing and installing dash panel insert . . . 73
2.3 Dash panel insert, rear . . . 77
2.4 Warning lamp symbols in dash panel insert . . . 80
2.5 Connector contact assignment on dash panel insert . . . 83
**3 Dash panel insert for vehicles 10.99 > . . . 85**
3.1 Dash panel insert for vehicles 10.99 > . . . 85
3.2 Removing and installing dash panel insert . . . 85
3.3 Dash panel insert, rear, vehicles 10.99 > . . . 87
3.4 Warning lamp symbols in dash panel insert (apart from Polo GTI) . . . 89
3.5 Description of display instruments (apart from Polo GTI) . . . 91
3.6 Warning lamp symbols in dash panel insert (only Polo GTI) . . . 93
3.7 Description of display instruments (only Polo GTI) . . . 95
3.8 Connector contact assignment on dash panel insert . . . 96
**4 Service interval display for vehicles > 1997 . . . 97**
4.1 Service interval display for vehicles > 1997 . . . 97
4.2 Zeroing service interval display . . . 98
4.3 Flexible service interval display . . . 98
4.4 Zeroing flexible service interval display . . . 99
4.5 Entering service interval data . . . 99
**5 Service interval display for vehicles 1998 >09.99 . . . 101**
5.1 Service interval display for vehicles 1998 >09.99 . . . 101
5.2 Resetting service interval display . . . 102
**6 Service interval display for vehicles 10.99 > . . . 103**
6.1 Service interval display for vehicles 10.99 > . . . 103
6.2 Resetting service interval display . . . 104

## 92 - Windscreen wipe and wash system . . . 106

**1 Windscreen wiper system . . . 106**
1.1 Windscreen wiper system . . . 106
1.2 Removing and installing windscreen washer system, vehicles > 09.99 . . . 106
1.3 Removing and installing windscreen wiper system, vehicles 10.99 > . . . 109
1.4 Removing and installing wiper blade rubber . . . 114
**2 Windscreen washer system . . . 115**
2.1 Windscreen washer system . . . 115
2.2 Assembly overview: Windscreen washer system, vehicles > 09.99 . . . 115
2.3 Assembly overview: Windscreen washer system, vehicles 10.99 > . . . 117
2.4 Adjusting windscreen washer system jets . . . 118
2.5 Renewing windscreen washer system jets, vehicles 10.99 > . . . 119
2.6 Removing windscreen washer system reservoir, vehicles 10.99 > . . . 120
**3 Rear window wipe/wash system . . . 120**
3.1 Rear window wipe/wash system . . . 120
3.2 Assembly overview: Rear wipe and wash system, vehicles >09.99 . . . 121
3.3 Assembly overview: Rear window wipe and wash system, vehicles 10.99 > . . . 123
3.4 Adjusting rear window wiper rest position, vehicles > 09.99 . . . 125
3.5 Adjusting rear window wiper rest position, vehicles 10.99 > . . . 125
3.6 Adjusting washer jets . . . 126
3.7 Renewing washer jet, vehicles 10.99 > . . . 127
3.8 Removing rear window wiper, vehicles 10.99 > . . . 127
**4 Headlight washer system . . . 129**
4.1 Headlight washer system . . . 129
4.2 Assembly overview: Headlight washer system, vehicles > 09.99 . . . 129
4.3 Assembly overview: Headlight washer system, vehicles 10.99 > . . . 131
4.4 Adjusting washer jets, vehicles > 09.99 . . . 133

Published by copyright holder Volkswagen AG. Volkswagen AG does not guarantee or accept any liability with respect to the correctness of information in this document. Copyright by Volkswagen AG.
satelettronica

4.5 Adjusting washer jets, vehicles 10.99 > . . . 133
4.6 Removing and installing spray jet retainer, vehicles 10.99 > . . . 134
4.7 Removing and installing washer jet lift cylinder, vehicles 10.99 > . . . 135
4.8 Removing headlight washer system reservoir, vehicles 10.99 > . . . 135

**94 - Lights, Lamps, Switches - exterior . . . 137**

**1 Headlight . . . 137**
1.1 Headlight . . . 137
1.2 Assembly overview: Headlight, vehicles > 09.99 . . . 137
1.3 Assembly overview: Headlight, vehicles 10.99 > . . . 139
1.4 Assembly overview: Headlights with gas discharge bulbs, vehicles 10.99 > . . . 141
1.5 Adjusting headlight, vehicles > 09.99 . . . 143
1.6 Adjusting headlights, vehicles 10.99 > . . . 144
1.7 Removing and installing headlights, vehicles >09.99 . . . 145
1.8 Removing and installing headlights, vehicles 10.99 > . . . 145
1.9 Replacing headlight bulb, vehicles > 09.99 . . . 146
1.10 Replacing headlight bulb, vehicles 10.99 > . . . 147
1.11 Replacing headlight bulb with gas discharge . . . 149
1.12 Removing and installing headlight range control positioning motor, vehicles 10.99 > . . . 152
1.13 Removing and installing headlight range control positioning motor for headlights with gas discharge bulbs . . . 154
1.14 Removing and installing gas discharge bulb control unit . . . 155

**2 Front fog lights . . . 157**
2.1 Front fog lights . . . 157
2.2 Removing and installing front fog lights, vehicles >09.99 . . . 157
2.3 Removing and installing fog lights, vehicles 10.99 > . . . 158
2.4 Removing and installing foglight bulb, vehicles >09.99 . . . 159
2.5 Removing and installing fog light bulb, vehicles 10.99 > . . . 160

**3 Front turn signals . . . 161**
3.1 Front turn signals . . . 161
3.2 Removing and installing front turn signals, vehicles > 09.99 . . . 161
3.3 Removing and installing front turn signal, vehicles 10.99 > . . . 162
3.4 Replacing turn signal bulb, vehicles > 09.99 . . . 163
3.5 Replacing turn signal bulb, vehicles 10.99 > . . . 164

**4 Side mounted turn signals . . . 164**
4.1 Side mounted turn signals . . . 164
4.2 Removing and installing side mounted turn signals . . . 164

**5 Tail lights . . . 165**
5.1 Tail lights . . . 165
5.2 Assembly overview: Tail light, vehicles >09.99 . . . 166
5.3 Assembly overview: Tail light, vehicles 10.99 > . . . 167
5.4 Removing and installing tail light, vehicles >09.99 . . . 168
5.5 Removing and installing tail light, vehicles 10.99 > . . . 169
5.6 Removing and installing tail light bulb holder, vehicles > 09.99 . . . 170
5.7 Removing and installing tail light bulb holder, vehicles 10.99 > . . . 171

**6 Additional brake light . . . 172**
6.1 Additional brake light . . . 172
6.2 Assembly overview, vehicles >09.99 . . . 172
6.3 Removing and installing additional brake light, vehicles > 09.99 . . . 173
6.4 Removing and installing additional brake light, vehicles 10.99 > . . . 173
6.5 Removing and installing additional brake light, Polo GTI 10.99 > . . . 175

**7 Number plate lights . . . 176**
7.1 Number plate lights . . . 176
7.2 Removing and installing number plate light, vehicles > 09.99 . . . 176
7.3 Removing and installing number plate light, vehicles 10.99 > . . . 177

**8 Steering column switch and starter/ignition switch . . . 178**

satelettronica

8.1 Steering column switch and starter/ignition switch . . . . . 178
8.2 Assembly overview: Steering column, vehicles > 09.99 . . . . . 178
8.3 Assembly overview: Steering column, vehicles 10.99 > . . . . . 182
8.4 Removing and installing steering column switch, vehicles > 09.99 . . . . . 186
8.5 Removing and installing steering column switch, vehicles 10.99 > . . . . . 187
8.6 Wiring connections on steering column switches . . . . . 190
8.7 Removing and installing steering lock housing, vehicles > 09.99 . . . . . 191
8.8 Removing and installing steering lock housing, vehicles 10.99 > . . . . . 194
8.9 Removing and installing lock cylinder, vehicles >09.99 . . . . . 197
8.10 Removing and installing lock cylinder, vehicles 10.99 > . . . . . 198
8.11 Removing and installing ignition/starter switch . . . . . 199
8.12 Connector pin assignment on steering column switch . . . . . 200

**96 - Lights, Lamps, Switches - interior . . . . . 201**

**1 Immobilizer . . . . . 201**
1.1 Immobilizer . . . . . 201
1.2 Assembly overview: Immobilizer, vehicles > 09.99 . . . . . 201
1.3 Assembly overview: Immobilizer, vehicles 10.99 > . . . . . 202
1.4 Removing and installing immobilizer control unit, vehicles > 09.99 . . . . . 202
1.5 Removing and installing immobilizer control unit, vehicles 10.99 > . . . . . 203
1.6 Removing and installing immobilizer reader coil -D2-, vehicles > 09.99 . . . . . 204
1.7 Removing and installing immobilizer reader coil -D2-, vehicles 10.99 > . . . . . 204
1.8 Transponder . . . . . 204

**2 Interior lights and switches . . . . . 205**
2.1 Interior lights and switches . . . . . 205
2.2 Removing and installing switches in dash panel, vehicles > 09.99 . . . . . 205
2.3 Removing and installing switches in dash panel, vehicles 10.99 > . . . . . 208
2.4 Removing and installing lighting switch, vehicles > 09.99 . . . . . 210
2.5 Removing and installing lighting switch, vehicles 10.99 > . . . . . 210
2.6 Removing and installing headlight range control adjuster -E102- with regulator for switches and instruments illumination -E20-, vehicles 10.99 > . . . . . 211
2.7 Removing and installing switches in centre of dash panel, vehicles > 09.99 . . . . . 212
2.8 Removing and installing switches in centre of dash panel, vehicles 10.99 > . . . . . 212
2.9 Removing and installing hazard warning light switch -E3-, vehicles 10.99 > . . . . . 213
2.10 Removing and installing interior light, vehicles 10.99 > . . . . . 214
2.11 Removing and installing sliding roof adjustment regulator -E139-, vehicles 10.99 > . . . . . 214
2.12 Removing and installing window lifter switch, vehicles 10.99 > . . . . . 215
2.13 Removing and installing mirror adjustment switch -E43- with mirror adjustment change-over switch -E48-, vehicles 10.99 > . . . . . 216
2.14 Removing and installing door contact switch, vehicles 10.99 > . . . . . 217

**97 - Wiring . . . . . 218**

**1 Removing and installing relay plate, coupling station and fuse holder . . . . . 218**
1.1 Removing and installing relay plate, coupling station and fuse holder . . . . . 218
1.2 Removing and installing relay plate, vehicles > 1997 . . . . . 218
1.3 Removing and installing multi-pin plug behind relay plate, vehicles > 1997 . . . . . 219
1.4 Removing and installing fuse holder and relay carrier, vehicles 1998 >09.99 . . . . . 220
1.5 Removing and installing coupling station with relay carrier in front left footwell, vehicles 1998 >09.99 . . . . . 220
1.6 Removing and installing fuse holder in front left footwell, vehicles 1998 >09.99 . . . . . 220
1.7 Removing and installing relay plate, vehicles 10.99 > . . . . . 221
1.8 Removing and installing multi-pin plug below relay plate, vehicles 10.99 > . . . . . 224
1.9 Removing and installing fuse holder in front left footwell, vehicles 10.99 > . . . . . 225

**2 Wiring harness and connector repairs . . . . . 228**
2.1 Wiring harness and connector repairs . . . . . 228

satelettronica
Protected by copyright. Copyright by Volkswagen AG.

# 27 - Starter, Current supply

## 1 - Battery

### 1.1 - Battery

### 1.2 - Battery contents list


| Subject | Page |
|---|---|
| Battery handling instructions | 2 |
| Warnings and safety procedures when handling lead-acid batteries | 3 |
| Batteries with condition indicator | 3 |
| Visual check | 4 |
| Checking electrolyte level (batteries with condition indicator) | 4 |
| Batteries without condition indicator | 5 |
| Visual check | 5 |
| Checking electrolyte level | 6 |
| Checking specific gravity | 8 |
| Battery discharge test | 10 |
| Battery charging | 11 |
| Removing and installing battery | 12 |
| Explanation of central gas venting | 17 |


The following chapter contains repair information for the battery.

### 1.3 - Fundamentals for batteries

*Note:*

- Due to technical reasons in production there are two different types of batteries installed in the Polo.
- Batteries condition indicator => 5 .
- The following brief description is intended to provide information about which batteries are fitted due to technical differences.

**Brief description**

- Batteries with white housing, hard lead coated electrode plates, visible cell plugs and no condition indicator (low maintenance).
- Batteries with black housing, lead calcium coated electrode plates, condition indicator and sealed cell plugs (maintenance-free).

*Note:*

*In this workshop manual we have revised and documented the work content and procedures according to the latest information available. This means that checking and maintenance work will now be easier and time-*

Volkswagen AG does not guarantee or accept any liability with respect to the correctness of information in this document. Copyright by Volkswagen AG. Protected by copyright. Copying for private or commercial purposes, in part or in whole, is not permitted unless authorised by Volkswagen AG.
satelettronica

*saving. The following work content and procedures and those described in the 'Brief information' and on the following pages is sufficient for each battery type.*

Brief information

- Batteries with condition indicator, visual check of housing, battery terminals and clamps, visual check of electrolyte level and specific gravity by means of condition indicator, if necessary battery discharge test.
- Batteries without condition indicator, visual check of housing, battery terminals and clamps, visual check of electrolyte level, specific gravity check with commercially available hydrometer, if necessary battery discharge test.

The battery is one of the most important electrical components in a vehicle. A trouble free battery has a great influence on customer satisfaction. To ensure long use of the battery, the battery must be checked, serviced and maintained as per the instructions in this Manual.

Apart from starting, the battery has other tasks: It acts as a buffer and supplies electrical energy to the complete vehicle electrical system.

The battery has also gone through a technical change and further development will continue. But today it is not possible, for reasons of physical/chemical limits, to have a completely maintenance free battery in a vehicle.

Thanks to constructive and physical changes of the positive electrode plates and to lead calcium coating, a new generation of batteries has been manufactured. The advantage of these batteries is the low electrolyte consumption. The batteries require the minimum of maintenance over a long period of time. Checking charge and electrolyte levels has become easier due to the condition indicator. Battery handling instructions for batteries with a condition indicator can be found under the heading "Batteries with condition indicator".

## 1.4 - Battery handling instructions

- Battery terminals must no longer be greased.
- Battery terminal clamps must only be fitted by hand without force, this prevents damage to battery housing.

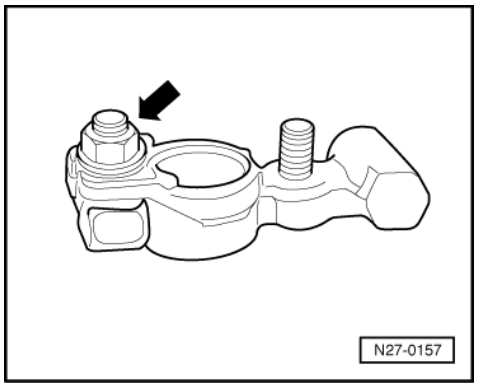


- -> The tightening torque for the battery terminal clamp is 6 Nm.
- The tightening torque for the additional terminals on the battery terminal clamp is 6 Nm.
- Check vehicle equipment (radio, clock and convenience electrics etc.) according to Workshop Manual and/or Owner's Manual when the battery has been disconnected and then reconnected.

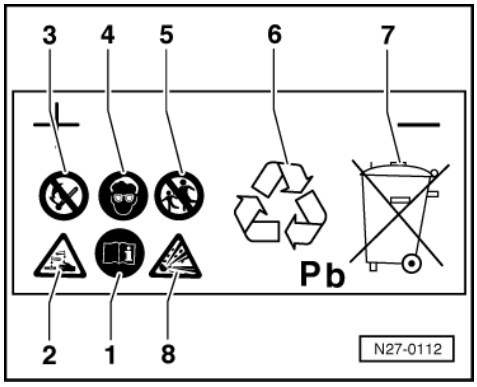


Protected by copyright. Copyright by Volkswagen AG. Copyright by Volkswagen AG. Volkswagen AG does not guarantee or accept any liability with respect to the correctness of information in this document. Copyright by Volkswagen AG. Protected by copyright. Copy and distribution not permitted unless authorised by Volkswagen AG. Commercial purposes or part of the contents not permitted.
satelettronica

Copyright by Volkswagen AG. Volkswagen AG does not guarantee or accept any liability with respect to the correctness of information in this document. Copyright by Volkswagen AG. Copying for private or commercial purposes, in part or in whole, is not permitted unless authorised by Volkswagen AG.

-> Warnings and safety procedures when handling lead-acid batteries

Follow instructions on battery, in Electrical system workshop manual and in Owner's manual.
2 - Danger from acid burns:
- Battery acid is very caustic, therefore wear eye protection and gloves;
- Do not tilt battery. Acid can leak out of the gas vents.

3 - Fires, sparks, naked lights and smoking prohibited:
- Avoid sparks when working with cables and electrical units.
- Avoid short circuits.

4 - Wear eye protection
5 - Keep children away from acid and batteries.
6 - Disposal:
- Dispose of old batteries at a battery collection point.

7 - Never dispose of old batteries in household waste system !
8 - Danger of explosion:
- A highly explosive gas is produced when charging batteries.

## 1.5 - Batteries with condition indicator

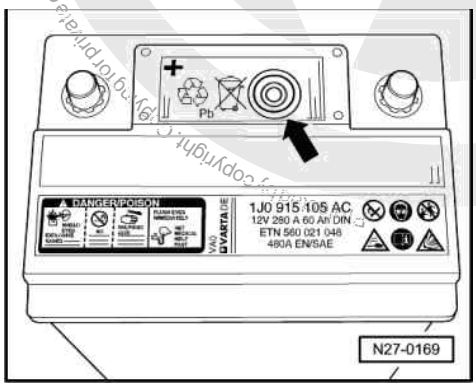


-> Identification

- Batteries with a condition indicator are produced with a black housing.
- The condition indicator -arrow- provides information concerning the electrolyte level and charge condition.

*Note:*

- The condition indicator can be located at various positions on the battery depending on the manufacturer (e.g. in any of the cell plug positions).
- Three different colour displays are possible:
  - Green ⇒the battery is charged sufficiently.
  - Black ⇒ not charged or charged insufficiently=>Page 11 .
  - Colourless or yellow ⇒the critical electrolyte level has been reached, it is absolutely necessary to top up with distilled water.
- Please note when the condition indicator is colourless and the battery is more than 5 years old it must be replaced.

*Note:*

*Air bubbles can form under the condition indicator especially if a battery has been charged, i.e. even when the battery is charged during driving. This falsifies the colour display of the condition indicator.*

- Before a visual check is performed, tap the condition indicator lightly and carefully with the handle of a screwdriver.

The air bubbles will dissipate.

Reading the coloured display of the condition indicator will therefore be more accurate.

satelettronica

## 1.6 - Visual check

It is important to first check the condition of the battery visually before any more complicated tests are carried out in order to maintain the demands on quality expected by our organisation and our customers.

*Performing this test establishes:*

- Whether the battery housing is damaged.
  Electrolyte can leak out if the housing is damaged.
- Whether the battery terminals (battery wiring/cable connections) are damaged.
  The contact on the terminals cannot be guaranteed if the terminals are damaged. Take note when fitting clamps to the terminals that these are tightened to the prescribed torque stated in this Workshop Manual. If the clamps are not located correctly and are then tightened, the cable or wiring could spark or burn, which in turn could lead to malfunctions in the electrical system. In this case the correct functioning of the vehicle systems could be considerably impaired.

## 1.7 - Checking electrolyte level (batteries with condition indicator)

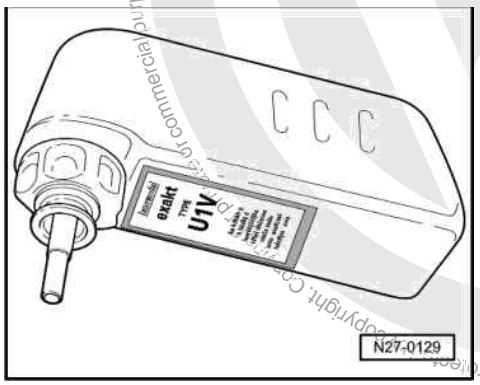


**Special tools, testers, measuring units and auxiliary items required**

- VAS 5045 Battery filling bottle

Warning!
When using sulphuric acid it is absolutely necessary to adhere to the accident prevention procedures.
Suitable protective clothing must be worn.
Only use a torch to illuminate the inside of the battery housing.
Never illuminate the inside of a battery housing with an open flame.
Never work with an open flame or burning cigarette in the vicinity of a battery.
Ensure the legislation for the disposal of batteries and sulphuric acid is observed when disposing batteries.

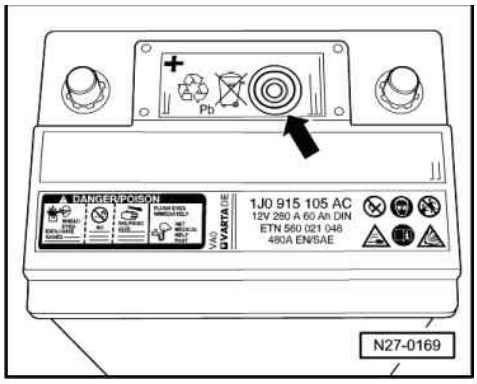


satelettronica

*Note:*

- -> The electrolyte level can be read at the condition indicator -arrow-.
- If you notice that the colour indicator is colourless or yellow, the battery must be topped up with distilled water.

A correct electrolyte level in the battery is an important factor in ensuring a long battery service life.

An insufficient electrolyte level allows the battery plates to dry which results in a loss of capacity (reduced output) of the battery. If the cell plates are not covered by electrolyte the plates, the plate bridges and the cell connections will corrode. This corrosion ensures the battery function can no longer be guaranteed. The battery is unusable.

If the electrolyte level is too high, damage will be caused outside the battery by the leaking battery acid (sulphuric acid/water mixture) e.g. components in engine compartment.

*Notes:*

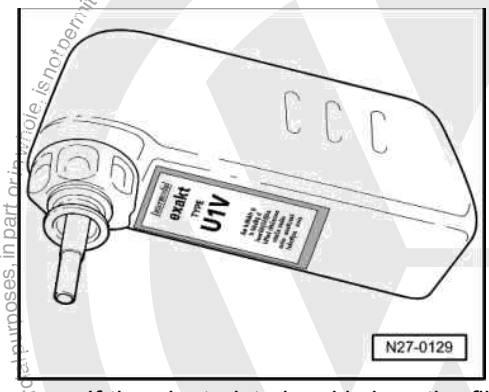


- -> If the electrolyte level is low, the filler bottle VAS 5045 is the ideal tool to top-up the battery. The design of the filler nozzle prevents any spilling or over filling. Once the maximum fill level has been reached, further filling of the battery is prevented due to the special nozzle feature of the filler bottle VAS 5045.
- Use distilled water only, this prevents contamination of the battery electrolyte and the therefore associated increased self discharge.
- If, for technical reasons, batteries are equipped with cell plugs, these are covered with a plastic foil.
- If in place of a cell plug a condition indicator is fitted, this obviously will not be covered.

- If the electrolyte level is not OK, correct as follows:
- Remove battery cell plug.
- If the electrolyte level is too low, fill with distilled water using only the battery filling bottle VAS 5045 up to the max. marking. The battery filling bottle VAS 5045 is the ideal tool for this purpose.

*Note:*

*If the battery has been topped up with distilled water, a battery discharge test must be performed.*

- Battery discharge test =>Page 10

## 1.8 - Batteries without condition indicator

### Visual check

It is important to first check the condition of the battery visually before any more complicated tests are carried out in order to maintain the demands on quality expected by our organisation and our customers.

*Performing this test establishes:*

- Whether the battery housing is damaged.
  Electrolyte can leak out if the housing is damaged.

Copyright by Volkswagen AG. Volkswagen AG does not guarantee or accept any liability with respect to the correctness of information. Copying for private or commercial purposes, in part or in whole, is not permitted unless authorised by Volkswagen AG.
satelettronica

- Whether the battery terminals (battery wiring/cable connections) are damaged.
  The contact on the terminals cannot be guaranteed if the terminals are damaged. Take note when fitting clamps to the terminals that these are tightened to the prescribed torque stated in this Workshop Manual. If the clamps are not located correctly and are then tightened, the cable or wiring could spark or burn, which in turn could lead to malfunctions in the electrical system. In this case the correct functioning of the vehicle systems could be considerably impaired.

## 1.9 - Checking electrolyte level

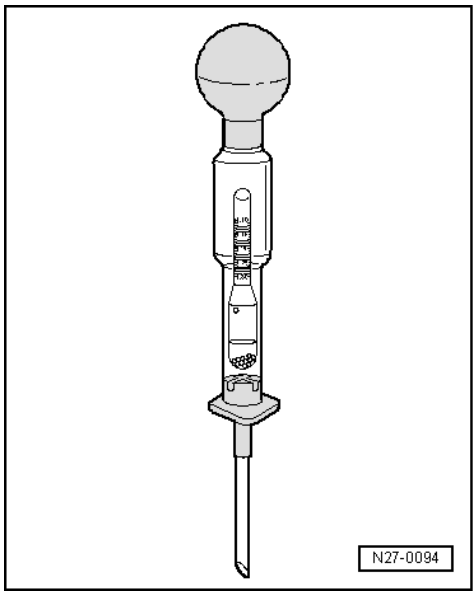


**Special tools, testers, measuring units and auxiliary items required**

- Commercially available hydrometer

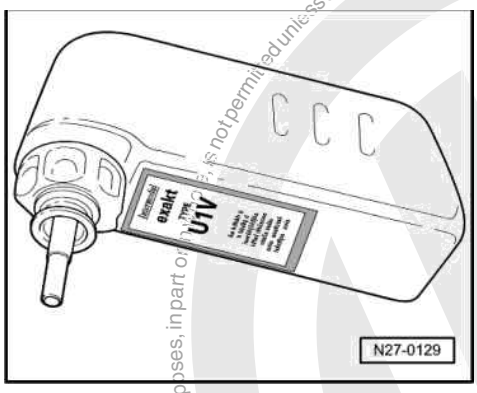


- VAS 5045 Battery filling bottle

Warning!
When using sulphuric acid it is absolutely necessary to adhere to the accident prevention procedures.
Suitable protective clothing must be worn.
Only use a torch to illuminate the inside of the battery housing.
Never illuminate the inside of a battery housing with an open flame.
Never work with an open flame or burning cigarette in the vicinity of a battery.
Ensure the legislation for the disposal of batteries and sulphuric acid is observed when disposing batteries.

A correct electrolyte level in the battery is an important factor in ensuring a long battery service life.

An insufficient electrolyte level allows the battery plates to dry which results in a loss of capacity (reduced output) of the battery. If the cell plates are not covered by electrolyte the plates, the plate bridges and the cell connec-

Copyright by Volkswagen AG. Volkswagen AG does not guarantee or accept any liability with respect to the correctness of information in this document. Copyright by Volkswagen AG. Copyright protected. Copying for private or commercial purposes, in part or in whole, is not permitted unless authorised by Volkswagen AG.
satelettronica

tions will corrode. This corrosion ensures the battery function can no longer be guaranteed. The battery is unusable.

If the electrolyte level is too high, damage will be caused outside the battery by the leaking battery acid (sulphuric acid/water mixture) e.g. components in engine compartment.

A visual check of the battery electrolyte level is all that is required on batteries with a recognisable minimum and maximum marking.

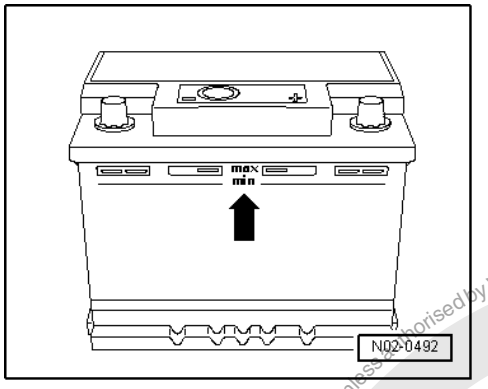


- Switch off ignition.
- -> Check electrolyte level visually at the min. and max. markings on the battery housing.

The electrolyte level is OK when the fluid level is between the minimum and maximum marking.

- Check electrolyte level visually. Look inside the battery.

If no min. and max. markings are visible on the battery housing or the electrolyte level is not visible:
The sealing plugs must be removed.
Thereafter the inside of the battery is visible and the level can be checked.

The electrolyte level is OK when the fluid level is the same height as the visible plastic peg or the cell plates are covered.

The plastic peg equates to the max, marking for the electrolyte level.

***Notes:***

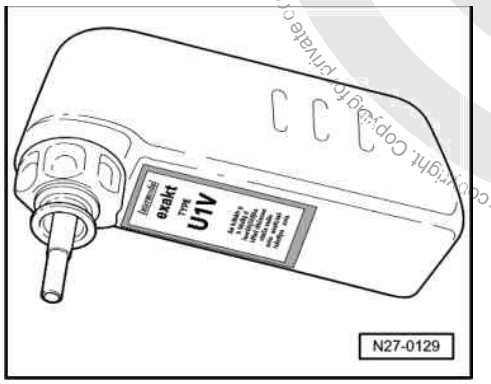


- -> If the electrolyte level is low, the filler bottle VAS 5045 is the ideal tool to top-up the battery. The design of the filler nozzle prevents any spilling or over filling. Once the maximum fill level has been reached, further filling of the battery is prevented due to the special nozzle feature of the filler bottle VAS 5045.
- Use distilled water only, this prevents contamination of the battery electrolyte and the therefore associated increased self discharge.

- If the electrolyte level is not OK, correct as follows:
- Remove battery cell plug.

Protected by copyright. Copying for private or commercial purposes, in part or in whole, is not permitted unless authorised by Volkswagen AG. Volkswagen AG does not guarantee or accept any liability with respect to the correctness of information in this document. Copyright by Volkswagen AG.
satelettronica

- If the electrolyte level is too low fill with distilled water using only the battery filling bottle VAS 5045 up to the max. marking. The battery filling bottle VAS 5045 is the ideal tool for this purpose.

***Note:***

*If the battery has been topped up with distilled water, a battery discharge test must be performed.*

- Battery discharge test =>Page 10

- If the electrolyte level is too high use commercially available hydrometer to extract excessive electrolyte until the fluid level is the same as the inner plastic peg level marking.
- Once the battery has been topped up or the electrolyte level has been reduced to normal the cells must be sealed only with the original cell plugs.

It is absolutely necessary to use original sealing plugs in the battery screwed openings to guarantee the battery is sealed correctly.

Use original sealing plugs of same construction if lost or damaged.

The sealing plugs must be fitted with an O-ring.

## 1.10 - Checking specific gravity

***Note:***

*The following specific gravity test should only be performed on batteries without condition indicator.*

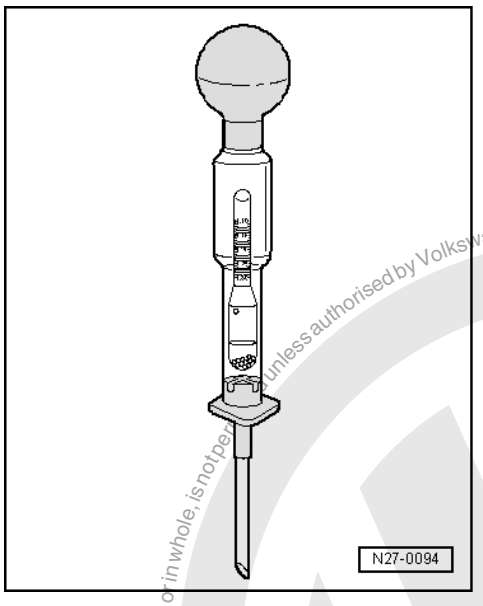


**Special tools, testers, measuring units and auxiliary items required**

- Commercially available hydrometer
- Cleaning cloths

Protected by copyright. Copying for private or commercial purposes, in part or in whole, is not permitted unless authorised by Volkswagen AG. Volkswagen AG does not guarantee or accept any liability with respect to the correctness of information in this document. Copyright by Volkswagen AG.
satelettronica

Warning!
When using sulphuric acid it is absolutely necessary to adhere to the accident prevention procedures.
Suitable protective clothing must be worn.
Only use a torch to illuminate the inside of the battery housing.
Never illuminate the inside of a battery housing with an open flame.
Never work with an open flame or burning cigarette in the vicinity of a battery.
Ensure the legislation for the disposal of batteries and sulphuric acid is observed when disposing batteries.

**The electrolyte specific gravity test and the battery load test provide information about the battery condition.**

The electrolyte temperature must be at least 10°C.

The specific gravity must be checked in all battery cells as follows:

- Switch off ignition.
- Remove all battery plugs (battery cell sealing plugs).

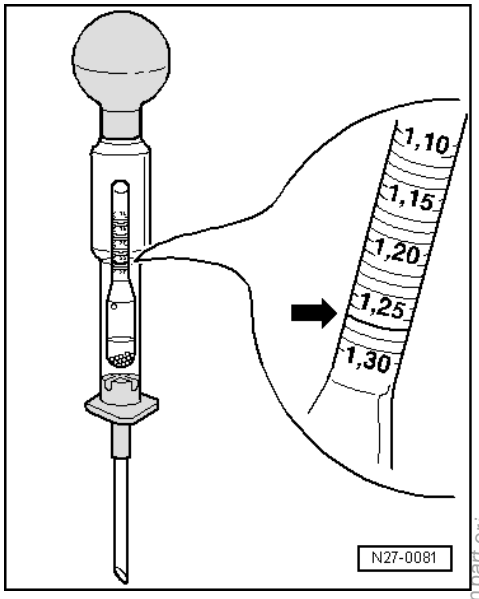


- -> Immerse end of hydrometer in a cell and extract sufficient electrolyte so that float swims free in the electrolyte.

The denser the extracted electrolyte the higher the float swims.

The density in kg/dm3 can be read off the scale of the hydrometer (specific density of electrolyte).

- Read off measured value on hydrometer and compare with table:

| Charge condition in normal climatic zones | Specific densities in kg/dm3 |
|---|---|
| Discharged | 1.15 |
| Half charged | 1.22 |
| Well charged | 1.28 |

The electrolyte density must be at least 1.24kg/dm3.

- Charge battery if electrolyte density (specific gravity) is insufficient.
- Repeat electrolyte density (specific gravity) check after charging battery.

The measured value for the specific gravity of the individual battery cells must not differentiate in more than 0.03 kg/dm3.

Protected by copyright. Copyright by Volkswagen AG. Volkswagen AG does not guarantee or accept any liability with respect to the correctness of information in this document. Copyright by Volkswagen AG. Copying for private or commercial purposes, in part or in whole, is not permitted unless authorised by Volkswagen AG.
satelettronica

**Example of unacceptable deviations in specific gravity:**

| Battery cell: | 1 | 2 | 3 | 4 | 5 | 6 |
|---|---|---|---|---|---|---|
| | Electrolyte density per cell in kg/dm3 | | | | | |
| Example 1: | 1.24 | 1.25 | 1.25 | 1.10 | 1.24 | 1.25 |
| | | | | | | |
| Example 2: | 1.26 | 1.26 | 1.25 | 1.14 | 1.18 | 1.24 |

Example 1:

The specific gravity in cell 4 is too low.

Example 2:

The specific gravity in cells 4 and 5 is too low.
The electrolyte density deviations between the battery cells is more than 0.03 kg/dm3

- If the specifications are not obtained, renew battery.
- If the specifications are obtained, screw plugs in again.

It is absolutely necessary to use original sealing plugs in the battery screwed openings to guarantee the battery is sealed correctly.

Use original sealing plugs of same construction if lost or damaged.

The sealing plugs must be fitted with an O-ring.

- Use only genuine sealing plugs.

## 1.11 - Battery discharge (load) test

**The specific gravity test on batteries without condition indicator, the colour of the condition indicator and the discharge test give information about the condition of the battery.**

***Note:***

*Only perform battery discharge test on batteries with condition indicator when the colour indicator is black or if the vehicle, in which the battery is fitted, has starting problems.*

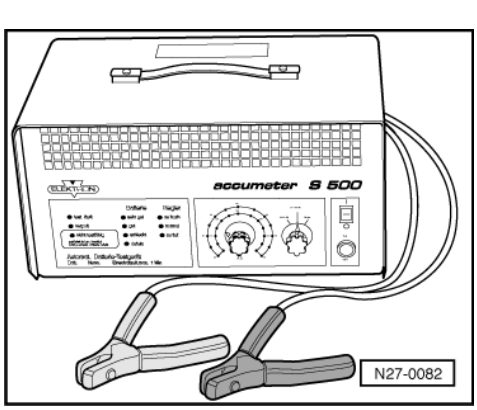


**Special tools, testers, measuring instruments and auxiliary items required**

- VAS 1979 or VAS 5033 Battery tester

Protected by copyright. Copying for private or commercial purposes, in part or in whole, is not permitted unless authorised by Volkswagen AG. Volkswagen AG does not guarantee or accept any liability with respect to the correctness of information in this document. Copyright by Volkswagen AG.
satelettronica

*Note:*

*It is not necessary to remove the battery when using battery test unit VAS 1979 or VAS 5033. The battery need not be disconnected.*

Performing battery discharge (load) test

- Switch off ignition.
- Read Operating Instructions for battery test unit.
- Connect tester cable clamps to battery terminal as described in test unit instruction manual.

The clamps must have a good contact with the battery terminals.

The use of the battery tester is described in the Operating instructions for battery test unit.

Explanation of battery load check:

Because of the high load on the battery during this test (a high current flows) the battery voltage lowers.

If the battery is OK the voltage value only lowers to the minimum voltage.

If the battery is defective or has a low charge the battery voltage quickly drops below the minimum voltage.

This low voltage value remains over a long period and the voltage only increases again slowly after a successful test.

## 1.12 - Battery charging

Warning!
When using sulphuric acid it is absolutely necessary to adhere to the accident prevention procedures.
Suitable protective clothing must be worn.
Only use a torch to illuminate the inside of the battery housing.
Never illuminate the inside of a battery housing with an open flame.
Never work with an open flame or burning cigarette in the vicinity of a battery.
Ensure the legislation for the disposal of batteries and sulphuric acid is observed when disposing batteries.

Special tools, testers, measuring instruments and auxiliary items required

- Battery charging unit
- Batteries should be charged using a V.A.G battery charging unit e.g. V.A.G 1471, V.A.G 1648 or V.A.G 1974.

*Notes:*

- The battery must have a temperature of at least 10°C.
- Batteries must not be charged quickly; they are damaged when charging quickly.
- If heavily discharged batteries are charged quickly they accept no charge current, or indicate fully charged too early due to the so-called "Surface charging". Afterwards they are not OK.

Performing battery charging

*Note:*

*Battery charging should only be performed with a V.A.G or VAS battery charging unit.*

- Switch off battery charging unit.
- Switch off ignition.
- Connect battery charging unit positive cable to battery positive terminal.
- Connect battery charging unit negative cable to battery negative terminal.

satelettronica

- Set battery unit charge current according to battery capacity.
- Switch on battery charging unit.

**Procedures for totally discharged batteries**

*Note:*

*Heavily discharged batteries can freeze in winter due to the high water content in the electrolyte. If a battery is frozen it must not be charged. The reason for this is because the housing becomes defective in a frozen state.*

**Remarks concerning totally discharged batteries:**

Batteries that have not been used for a long time e.g. vehicles that have been stored, self-discharge.

On totally discharge batteries the electrolyte (sulphuric acid/water mixture) is almost all water, the sulphuric acid part is heavily reduced.

Totally discharged batteries sulphate, therefore all of the plate surfaces of the battery harden.

If a totally discharged battery is charged again shortly after it has lost its charge, the sulphation will dissipate.

If these batteries are not recharged the plates continue to harden and the ability to recharge is reduced. A reduction in the battery output is the result.

Totally discharge batteries must be charged with a small charging current as follows:

- The charge current must be set at a maximum of 10 % of the battery capacity, therefore for a 60 Ah battery the charge current is a maximum 6A (ampere)

Charging battery => Page 11 .

The charge period must be at least 24 hours.

Totally discharged batteries must never be charged quickly.

## 1.13 - Removing and installing battery

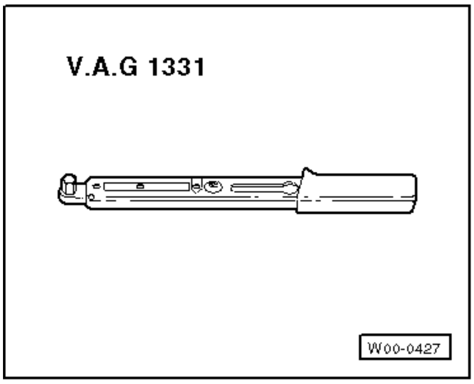


**Special tools, testers, measuring instruments and auxiliary items required**

- V.A.G 1331 Torque wrench (5 - 50 Nm)
- 10 mm Socket

satelettronica

Removing battery:

Before the battery can be removed, the fuse holder on the battery must be removed.

- Switch off ignition.
- Disconnect battery earth strap on battery negative terminal first.

Removing and installing fuse holder on battery

Carry out work sequence as follows:

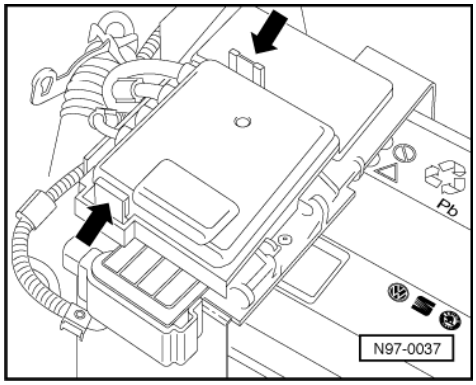


- -> Press locking lugs -arrows- together to open fuse holder and take off cover.

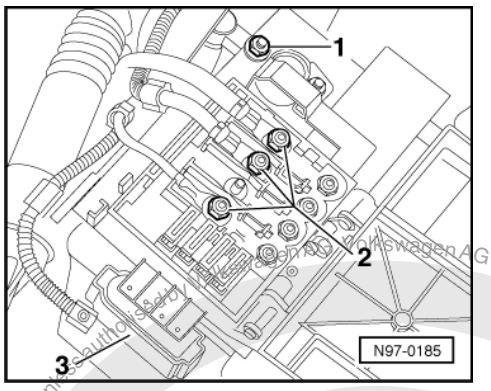


- -> Remove securing nut -1- of conductor plate on (+) terminal clamp.

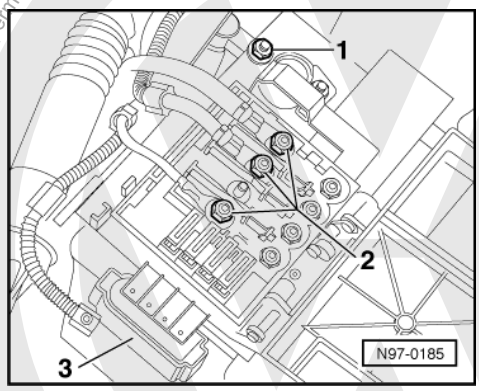


- -> Remove securing nuts -2- to disconnect wiring to strip fuses.
- Pull off connector -3-.

satelettronica
Protected by copyright. Copying for private or commercial purposes, in part or in whole, is not permitted unless authorised by Volkswagen AG. Volkswagen AG does not guarantee or accept any liability with respect to the correctness of information in this document. Copyright by Volkswagen AG.

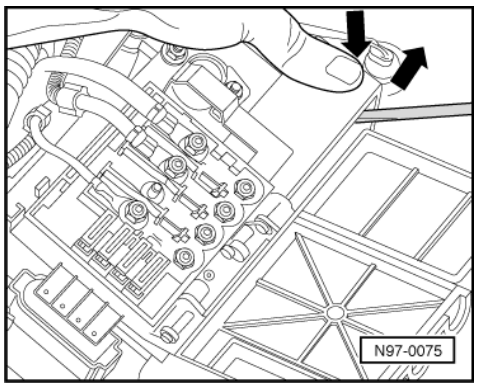


- -> Release tension on fuse holder spring catch by pressing down with a thumb and lever spring catch locking device off battery using a suitable screwdriver.
- Remove fuse holder from battery upwards.

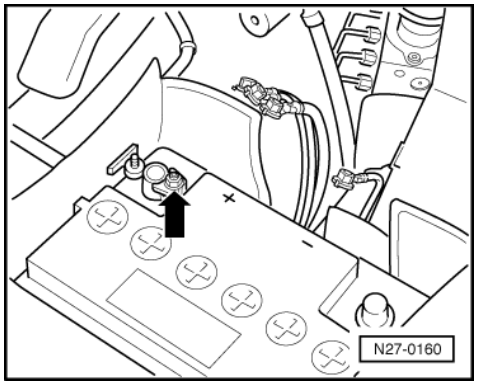


- -> Then release the battery positive terminal clamp securing bolt -arrow-.

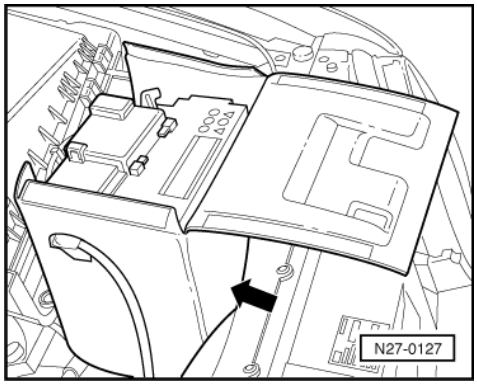


- -> The battery heat insulation jacket can only be opened and removed (if fitted) after first loosening the battery positive clamp and taking off of the battery positive terminal.

Protected by copyright. Copying for private or commercial purposes, in part or in whole, is not permitted unless authorised by Volkswagen AG. Volkswagen AG does not guarantee or accept any liability with respect to the correctness of information in this document. Copyright by Volkswagen AG.
satelettronica

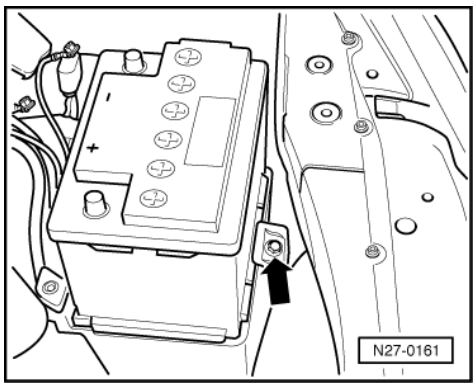


- -> Remove M8 x 25 hexagon bolt -arrow-.
- Remove battery clamping bracket

Installing battery:

*Note:*

*When the battery is reconnected, check the vehicle equipment (radio, clock, electrical windows) as per Workshop Manual and/or the owner's manual.*

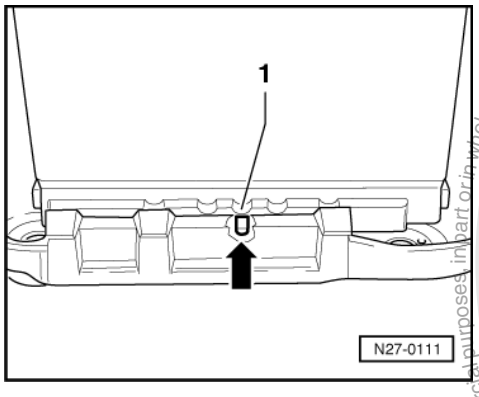


To guarantee the battery seats securely only install batteries with a 10.5 mm battery foot strip and adhere to the following work sequences:

- -> Install battery so that the lug of the battery carrier -arrow- engages in the battery foot strip cut-out -1-.

It must not be possible to move a battery to the left or to the right.

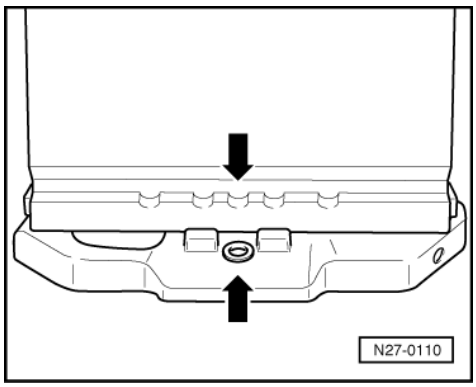


-> The battery is inserted correctly when the centre cut-out in the battery foot strip aligns with threaded hole in the battery carrier -arrows-.

Protected by copyright. Copying for private or commercial purposes, in part or in whole, is not permitted unless authorised by Volkswagen AG. Volkswagen AG does not guarantee or accept any liability with respect to the correctness of information in this document. Copyright by Volkswagen AG.
satelettronica

- On batteries with a hose for central venting ensure that the hose is not squashed. Only then can the battery vent freely.
- Ensure that the opening on the upper side of the battery cover is not blocked on batteries without a hose for central venting.

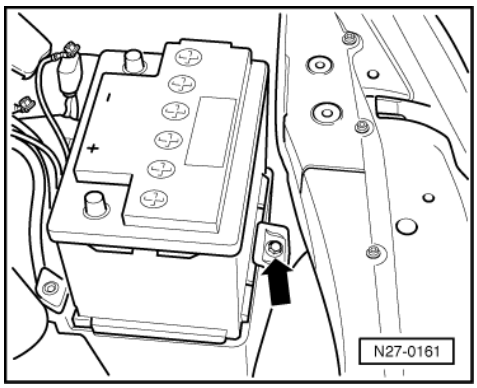


- -> Fit battery clamping bracket and tighten M8 x 25 securing bolt -arrow- to 22 Nm.
- Reinstall the heat insulation jacket if necessary.
- Fit positive wire clamp onto battery positive terminal.

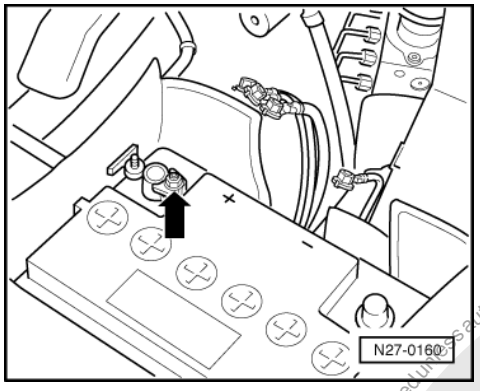


*Notes:*

- Battery terminal clamps must only be fitted by hand without force, this prevents damage to battery housing.
- Battery terminals must no longer be greased.

- -> Tighten battery positive terminal clamp securing screw -arrow- to 6 Nm.
- Fit fuse holder onto battery, when doing this fit current conductor plate onto securing pins on battery positive terminal.
- Engage fuse holder spring catch in battery.
- Tighten securing bolt to 6 Nm.

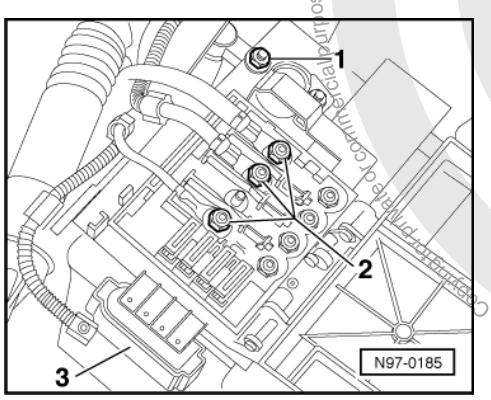


- Close heat insulation jacket if necessary.
- -> Tighten securing nuts -1- for current conductor plate on (+) positive terminal clamp.

Protected by copyright. Copying for private or commercial purposes, in part or in whole, is not permitted unless authorised by Volkswagen AG. Volkswagen AG does not guarantee or accept any liability with respect to the correctness of information in this document. Copyright by Volkswagen AG.
satelettronica

- Connect wiring/cables to strip fuses again if they have been disconnected and tighten securing bolts -2-.

***Note:***

*Obtain connector pin assignment from respective current flow diagram!*

=> Current flow diagrams, Electrical fault finding and Fitting locations binder

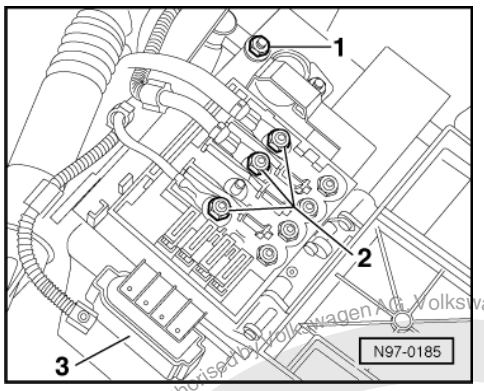


- -> Fit connections -3-.
- Fit fuse holder cover and close.
- After installing check battery is seated securely. The following dangers exist with a loosely fitted battery:
  - Shortened service life due to damage from vibration.
  - The cells in the battery will be damaged if the battery is not secured correctly.
  - Damage to battery housing by clamping bracket (possibility of acid leaking, therefore subsequent higher costs).
  - Poor crash safety

## 1.14 - Explanation of central gas venting

***Functional notes for central venting:***

- Batteries of the latest generation are equipped with a central venting system with an anti-flash protection.
- The anti-flash protection consists of a small round fibre glass mat with a diameter of approx. 15 mm and a thickness of 2 mm. It functions similar to a valve, therefore the gasses that form in the battery can vent.
- The gasses that form whilst charging can vent centrally through an opening on the upper side of the cover. The anti-flash protection is also fitted at this point which prevents ignition of the flammable gasses in the battery.

***Different central gas vent forms of construction***

*There are two types of batteries with central gas vents:*

- Batteries with a hose on central gas vent
- Batteries without a hose on central gas vent

It is absolutely necessary to use original sealing plugs in the battery screwed openings to guarantee the battery is sealed correctly.

Use original sealing plugs of same construction if lost or damaged.

The sealing plugs must be fitted with an O-ring.

Copyright by Volkswagen AG. Volkswagen AG does not guarantee or accept any liability with respect to the correctness of this document. Copyright by Volkswagen AG. Reproduction, distribution and publication for commercial purposes, in part or in whole, is not permitted without the express consent of Volkswagen AG.
satelettronica

# 2 - Starter

## 2.1 - Starter

Warning!
Before working on the electrical system disconnect the battery earth strap.

*Notes:*

- If the vehicle has a security-coded radio, obtain the correct anti-theft code number before disconnecting the battery.
- Check vehicle equipment (radio, clock and convenience electrics etc.) according to Workshop Manual and/ or Owner's Manual when the battery has been disconnected and then reconnected.
- Notes concerning the removal and installation of the starter bush can also be found in

=> Repair group 34

=> Repair group 37

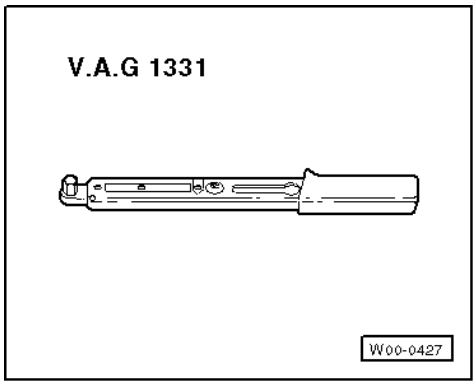


## 2.2 - Removing and installing starter (petrol engine)

**Special tools, testers, measuring instruments and auxiliary items required**

- V.A.G 1331 Torque wrench (5 - 50 Nm)

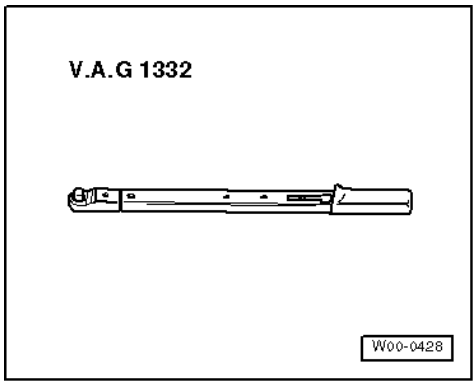


- V.A.G 1332 Torque wrench (40 - 200 Nm)

Protected by copyright. Copying for private or commercial purposes, in part or in whole, is not permitted unless authorised by Volkswagen AG. Volkswagen AG does not guarantee or accept any liability with respect to the correctness of information in this document. Copyright by Volkswagen AG.
satelettronica

Removing:

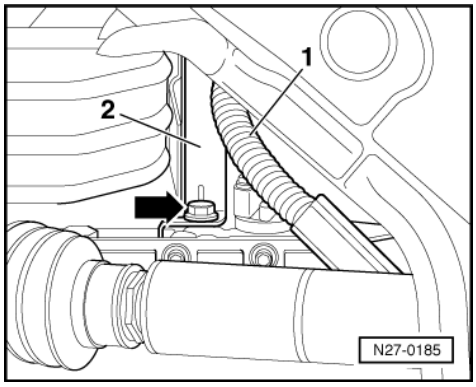


- Disconnect earth strap at battery.
- -> Unclip wire -1- from support -2- .
- Unscrew hexagon bolt -arrow- and remove support -2-.

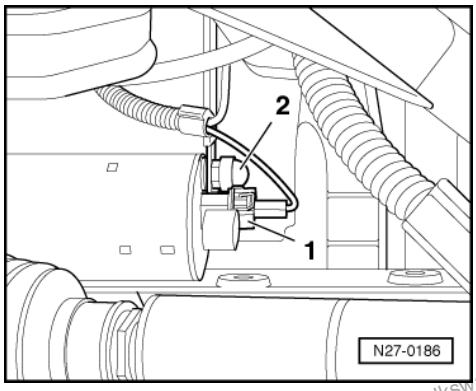


- -> Release and pull off connector terminal 50 -1-.
- Remove plastic cap --2- and disconnect wire from solenoid terminal 30.

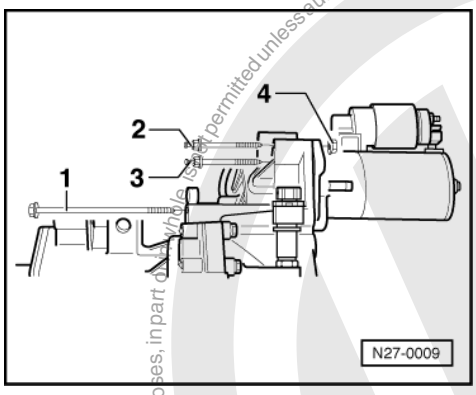


- -> Unscrew hexagon bolt -1-.
- Unscrew hexagon nut -4-.

***Note:***

*On some vehicles, bolts -2- and -3- are secured with a locking device.*

- Unscrew hexagon bolt -3- and remove bolt -2-.
- Remove starter downwards.

Protected by copyright. Copyright by Volkswagen AG.
Copying for private or commercial purposes, in part or in whole, is not permitted unless authorised by Volkswagen AG. Volkswagen AG does not guarantee or accept any liability with respect to the correctness of information in this document.
satelettronica

Installing:

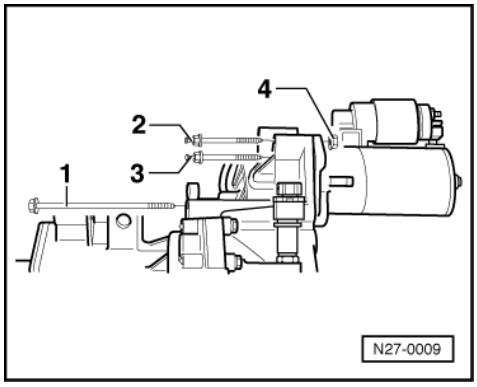


- Position starter.
- -> Screw in hexagon bolts -1- and -3- hand tight.
- Insert hexagon bolt -2- and screw on hexagon nut -4- hand tight.
- Tighten hexagon bolts -1- and -2- and also hexagon nut -4-.

Torque settings:
Hexagon bolt -1-: 45 Nm
Hexagon bolt -3-: 60 Nm
Hexagon nut -4-: 60 Nm

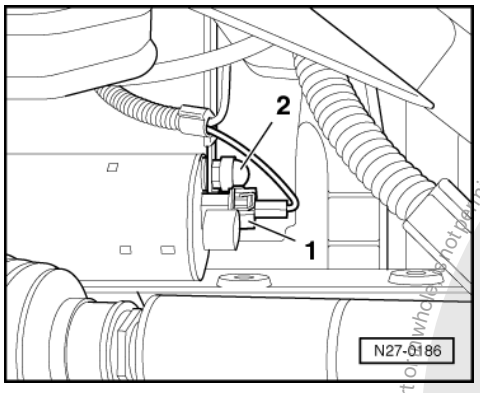


*Note:*

*If necessary, secure bolts -2- and -3- with locking device.*

- -> Release and pull off connector terminal 50 -1-
- Screw on wire to solenoid (terminal 30) and tighten to 13 Nm. Then press on plastic cap -2-.

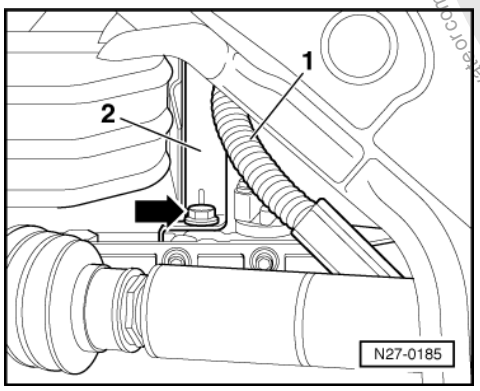


- -> Position support -2- and tighten hexagon bolt -arrow-.
- Clip in wire -1- to support -2-.

Protected by copyright. Copying for private or commercial purposes, in part or in whole, is not permitted unless authorised by Volkswagen AG. Volkswagen AG does not guarantee or accept any liability with respect to the correctness of information in this document. Copyright by Volkswagen AG.
satelettronica

## 2.3 - Removing and installing starter (diesel engine)

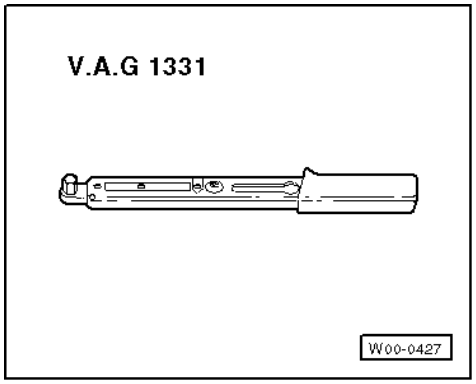


**Special tools, testers, measuring instruments and auxiliary items required**

- V.A.G 1331 Torque wrench (5 - 50 Nm)

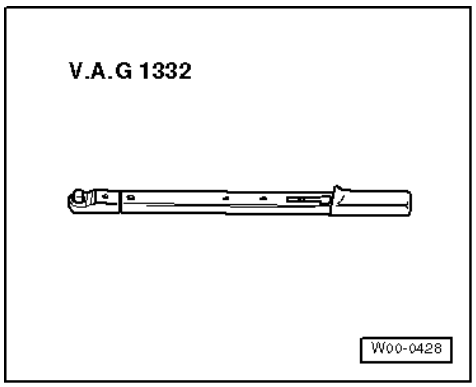


- V.A.G 1332 Torque wrench (40 - 200 Nm)

**Removing:**

- Disconnect earth strap at battery.

***Note:***

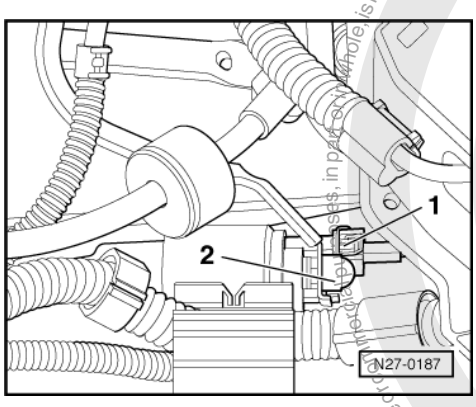


*On vehicles with 3-cyl. diesel engines, it may be necessary to first remove the vibration damper for the selector mechanism in order to remove the starter.*

*Apart from that it is also necessary on these vehicles to unclip the cable channel on the starter and place it to one side.*

satelettronica
Protected by copyright. Copyright by Volkswagen AG.
Volkswagen AG does not guarantee or accept any liability with respect to the correctness of information in this document. Copyright by Volkswagen AG.

- -> Release and pull off connector terminal 50 -1-.
- Remove plastic cap --2- and disconnect wire from solenoid terminal 30.

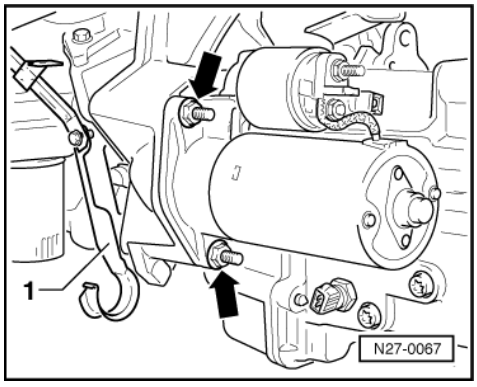


- -> Remove coolant hose retainer -1-.
- Remove threaded studs -arrows-.
- Remove starter upwards.

**Installing:**

- Position starter.
- Tighten threaded studs -arrows- to 60 Nm.

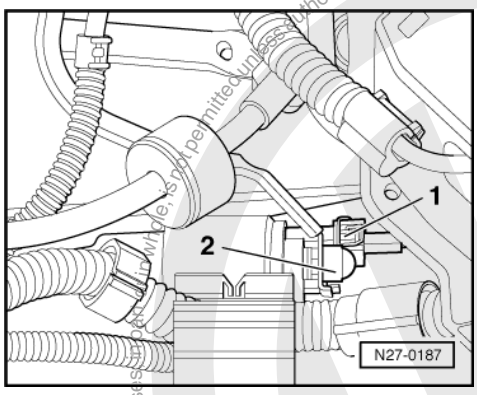


- -> Connect connector terminal 50 -1-.
- Tighten wire from solenoid terminal 30 to 13 Nm and press-on plastic cap -2-.
- If necessary install vibration damper for selector mechanism and clip in cable channel.

# 3 - Removing and installing alternator with ribbed belt

## 3.1 - Removing and installing alternator with ribbed belt

*Notes:*

- Check alternator:

=> Current flow diagrams, Electrical fault finding and Fitting locations binder

- When the battery is reconnected, check operation of vehicle electrical equipment (radio, clock and electric windows etc.) according to Workshop Manual or Owner's Manual.

| |
|---|
| Warning!<br>Before working on the electrical system disconnect the battery earth strap. |

Protected by copyright. Copyright by Volkswagen AG. Volkswagen AG does not guarantee or accept any liability with respect to the correctness of information in this document. Copyright by Volkswagen AG. Reproduction, distribution and commercial use is not permitted unless authorised by Volkswagen AG.
satelettronica

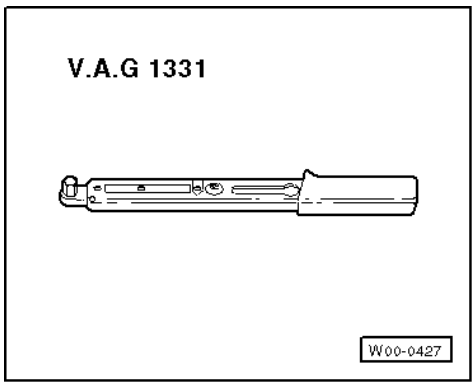


Special tools, testers, measuring instruments and auxiliary items required
- V.A.G 1331 Torque wrench (5 - 50 Nm)

## 3.2 - 4-cylinder fuel injection engine with basic belt drive, vehicles > 04.99

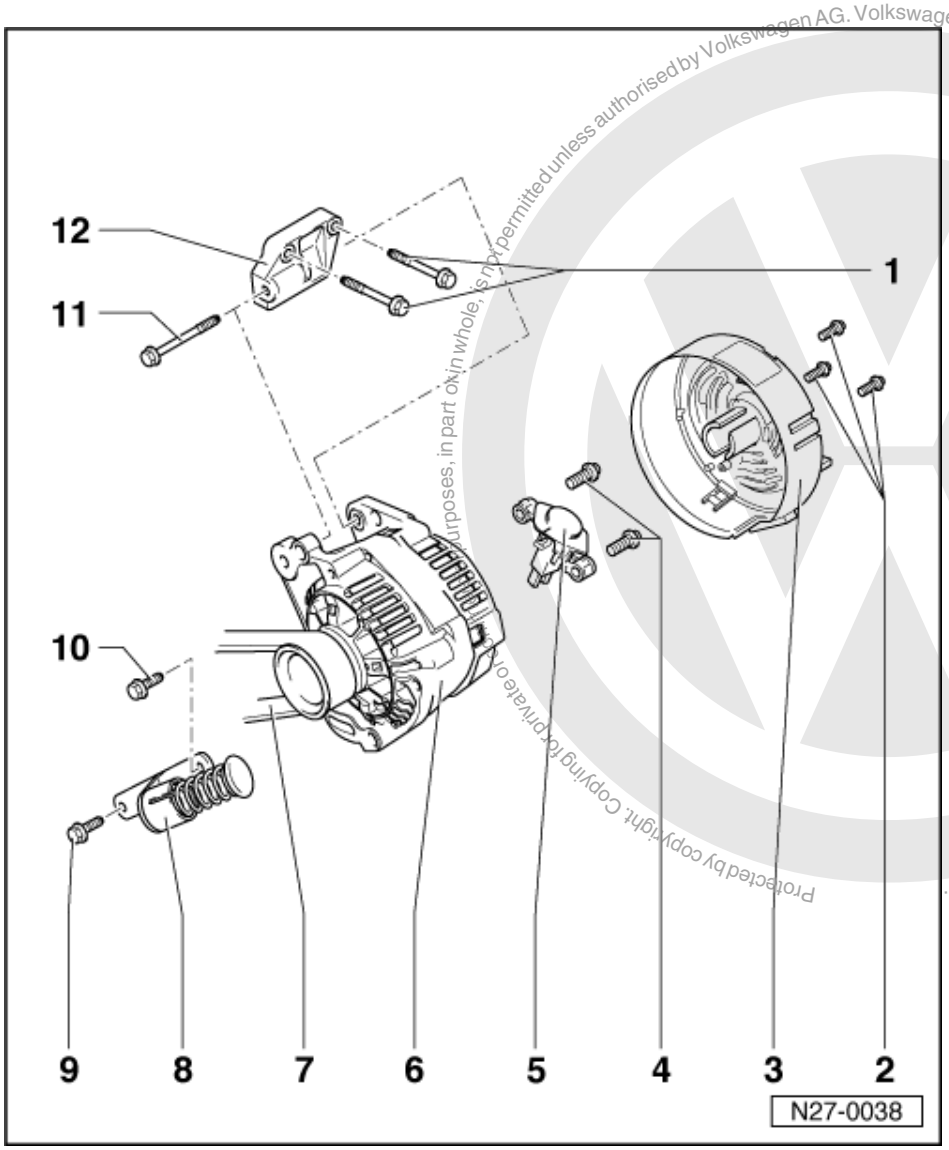


1 Hexagon bolts
- 55 Nm
- On aluminium block: M10x55 mm, Renew bolts (coated with sealant)

Protected by copyright. Copying for private or commercial purposes, in part or in whole, is not permitted unless authorised by Volkswagen AG. Volkswagen AG does not guarantee or accept any liability with respect to the correctness of information in this document. Copyright by Volkswagen AG.
satelettronica

- On cast iron block: M10x50 mm

2 Hexagon bolts
- M3 x 18mm

3 End cap

4 Cross-head screws
- M4 x 25mm

5 Voltage regulator
- Checking carbon brushes => Page 57
- Removing and installing => Page 57

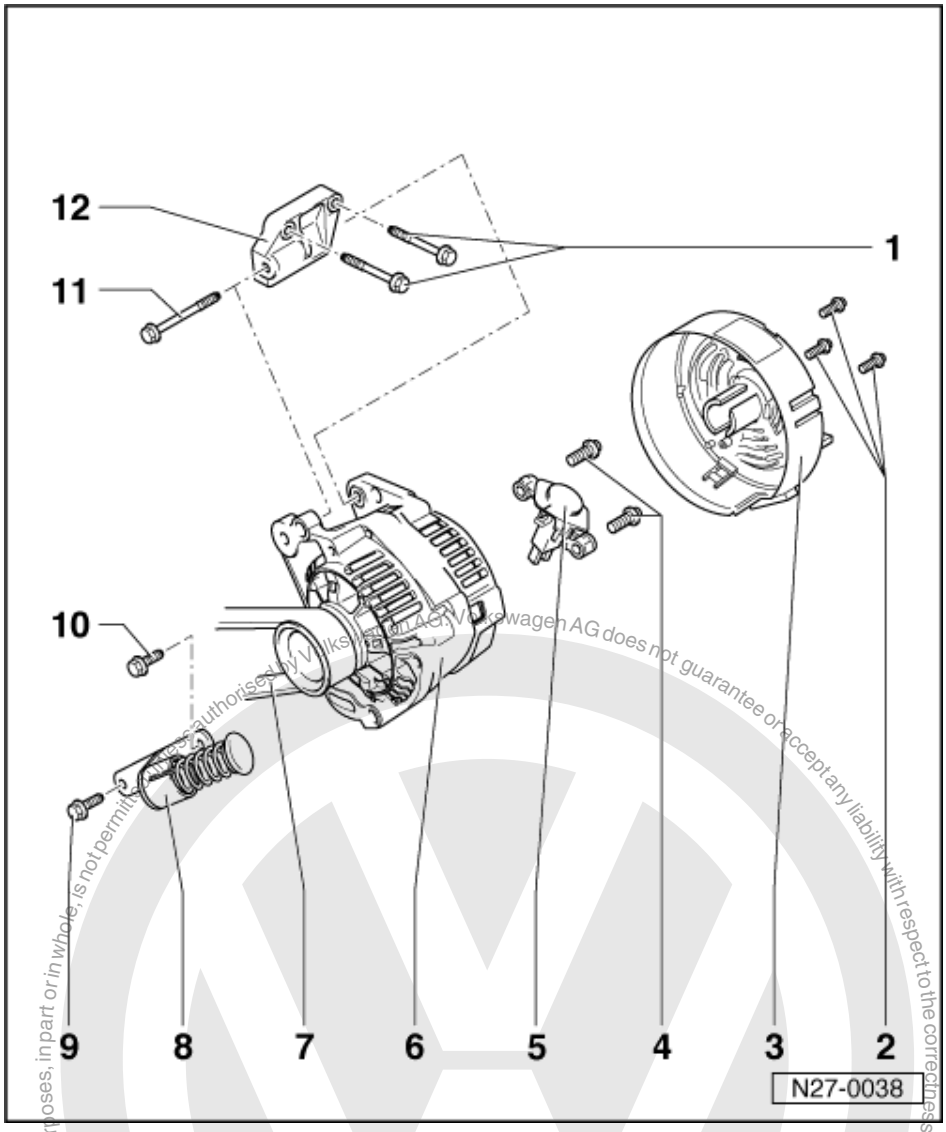


6 Alternator
- Tightening torque of B+ => Page 56

7 Ribbed belt
- Removing and installing => Page 52
- Ribbed belt drive => Page 49 , Fig. 1

8 Tensioning arm
- Observe tightening sequence =>Page 53

9 Hexagon bolt
- 25 Nm
- On aluminium block: M8x25 mm, Renew bolts (coated with sealant)

satelettronica

- On cast iron block: M8x22 mm

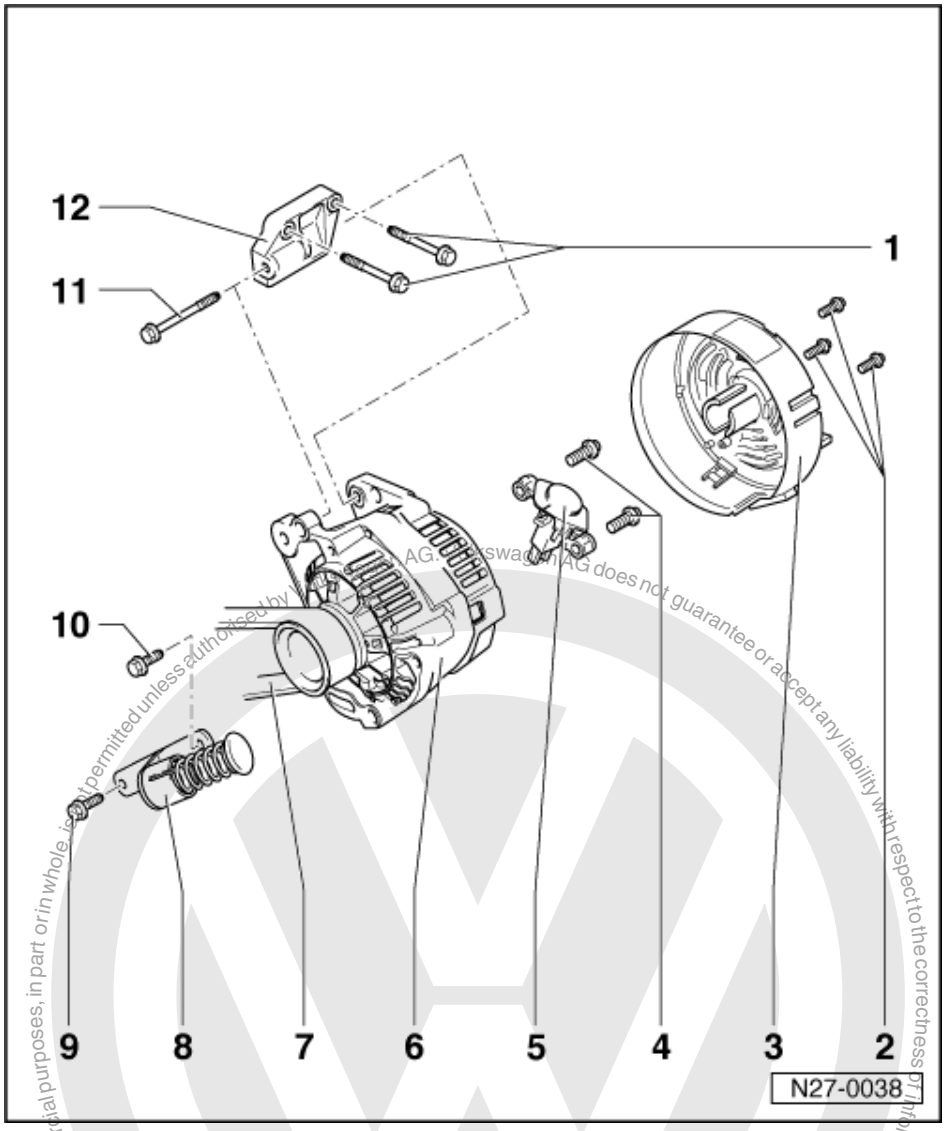


10 Hexagon bolt
- M8 x 35mm
- 25 Nm

11 Hexagon bolt
- M8 x 85 mm
- 25 Nm
- Observe tightening sequence =>Page 53

12 Bracket

Protected by copyright. Copying for private or commercial purposes, in part or in whole, is not permitted unless authorised by AG. Volkswagen AG does not guarantee or accept any liability with respect to the correctness of information in this document. Copyright by Volkswagen AG.
satelettronica

## 3.3 - 4-cylinder fuel injection engine with basic belt drive, vehicles 05.99 >

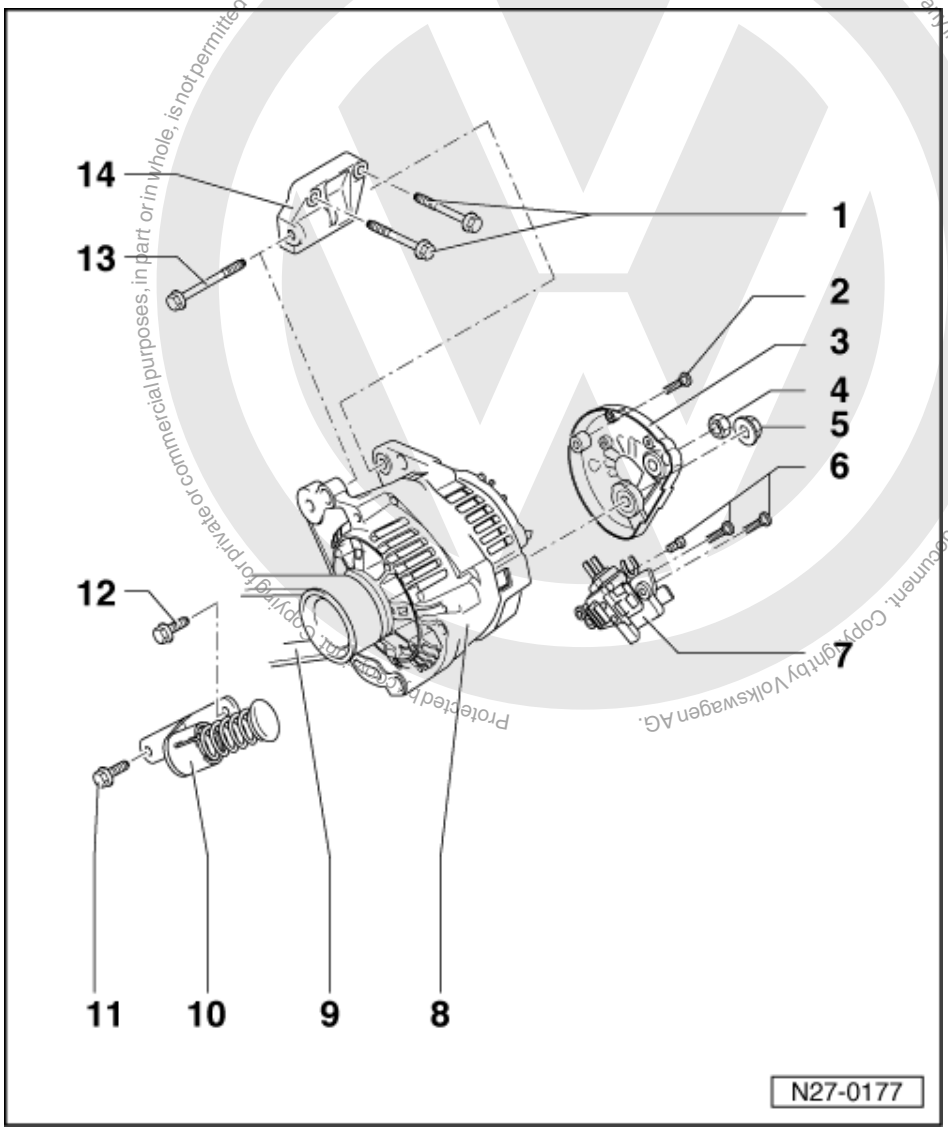


1 Hexagon bolts
- M10x50 mm
- 45 Nm
- On aluminium block: Renew bolts (coated with sealant)

2 Cross-head screw

3 Protective cap

4 Hexagon nut
- M8

5 Hexagon nut
- M8

6 Cross-head screws

Protected by Copyright. Copying for private or commercial purposes, in part or in whole, is not permitted unless authorised by Volkswagen AG. Volkswagen AG does not guarantee or accept any liability with respect to the correctness of information in this document. Copyright by Volkswagen AG.
satelettronica

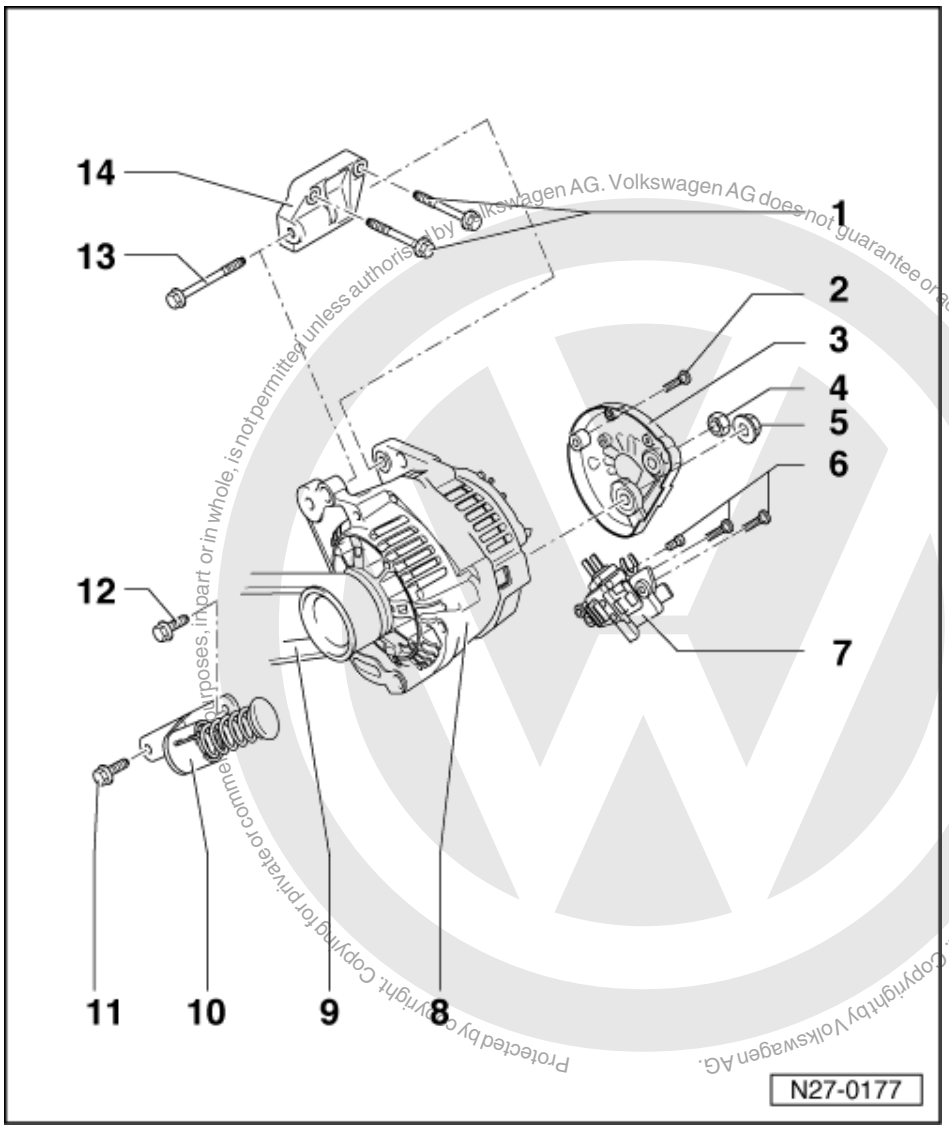


Protected by copyright. Copying for private or commercial purposes, in part or in whole, is not permitted unless authorised by Volkswagen AG. Volkswagen AG does not guarantee or accept any liability with respect to the correctness of information in this document. Copyright by Volkswagen AG.

7 Voltage regulator
- Checking carbon brushes => Page 58
- Removing and installing => Page 59

8 Alternator
- Tightening torque of B+ wire => Page 58

9 Ribbed belt
- Removing and installing => Page 52
- Ribbed belt drive => Page 49 , Fig. 1

10 Tensioning arm
- Observe tightening sequence =>Page 53

11 Hexagon bolt
- M8 x 22 mm
- 25 Nm
- On aluminium block: Renew bolts (coated with sealant)

satelettronica

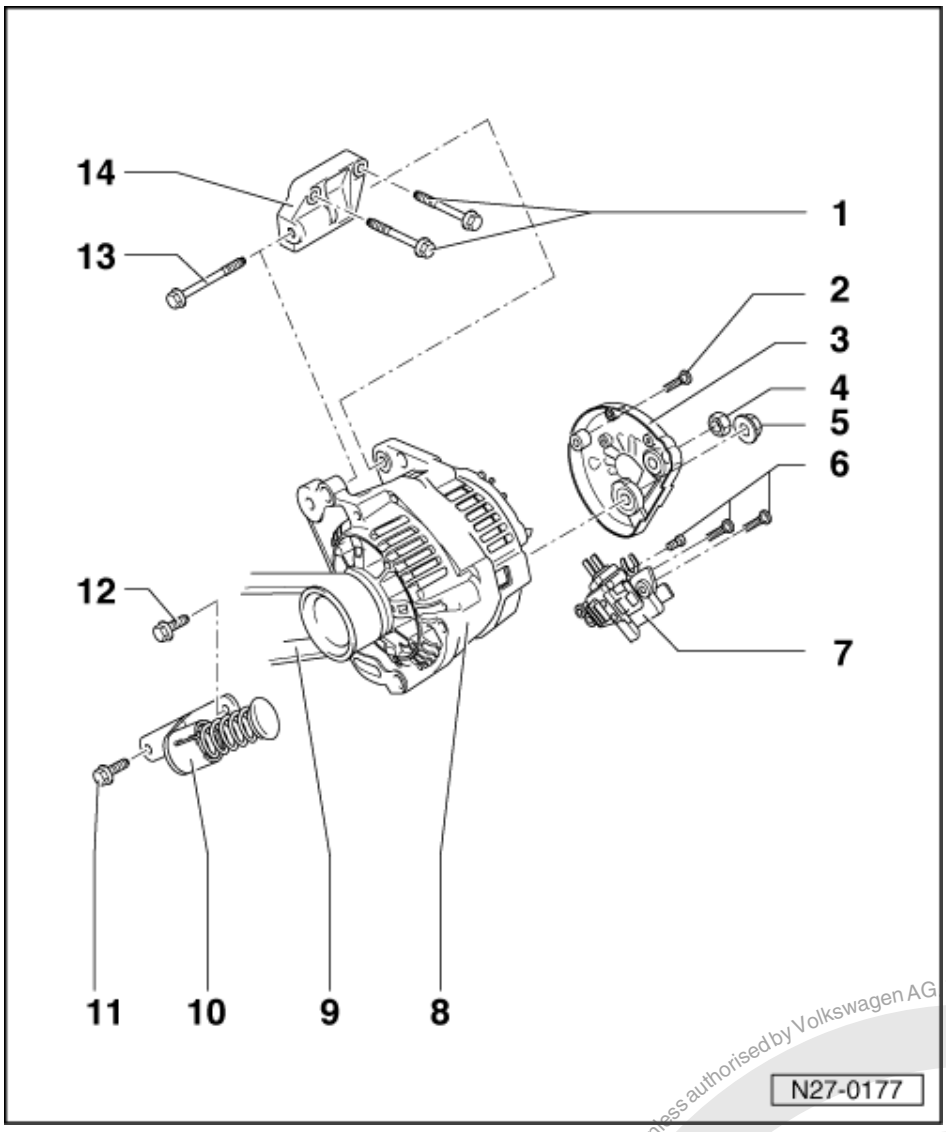


12 Hexagon bolt
- M8 x 39mm
- 25 Nm

13 Hexagon bolt
- M8 x 85 mm
- 25 Nm
- Observe tightening sequence =>Page 53

14 Bracket

satelettronica
Protected by copyright. Copying for private or commercial purposes, in part or in whole, is not permitted unless authorised by Volkswagen AG. Volkswagen AG does not guarantee or accept any liability with respect to the correctness of information in this document. Copyright by Volkswagen AG.

## 3.4 - 4-cylinder fuel injection engine with power-assisted steering, vehicles > 04.99

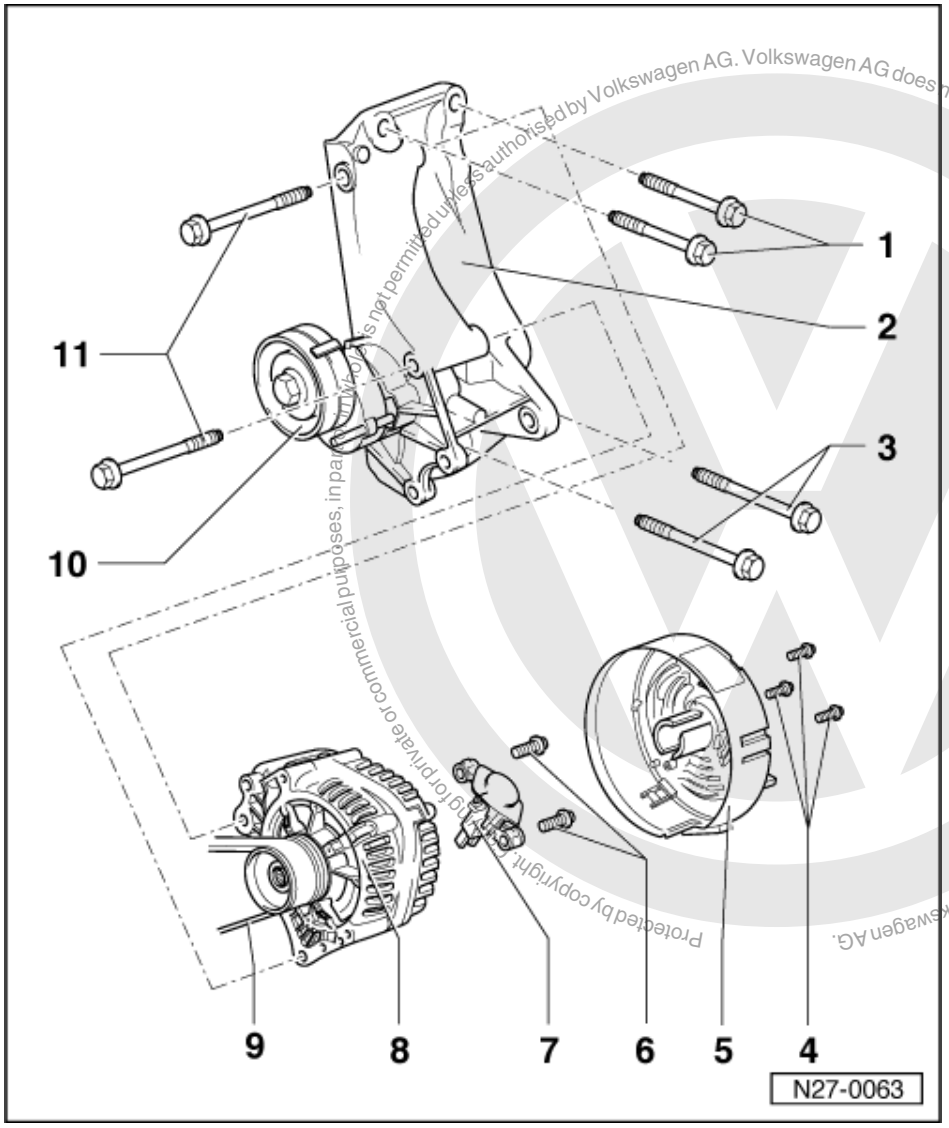


Protected by copyright. Copyright by Volkswagen AG. Volkswagen AG does not guarantee or accept any liability with respect to the correctness of information in this document. Copying for private or commercial purposes, in part or in whole, is not permitted unless authorised by Volkswagen AG.

satelettronica

1 Hexagon bolts
- 55Nm
- On aluminium block: M10x55 mm, Renew bolts (coated with sealant)
- On cast iron block: M10x50 mm
- Tightening sequence:
  Upper right bolt first (item 1), then lower right bolt (item 3), and upper and lower bolts on left last (as seen locking forwards)

2 Bracket

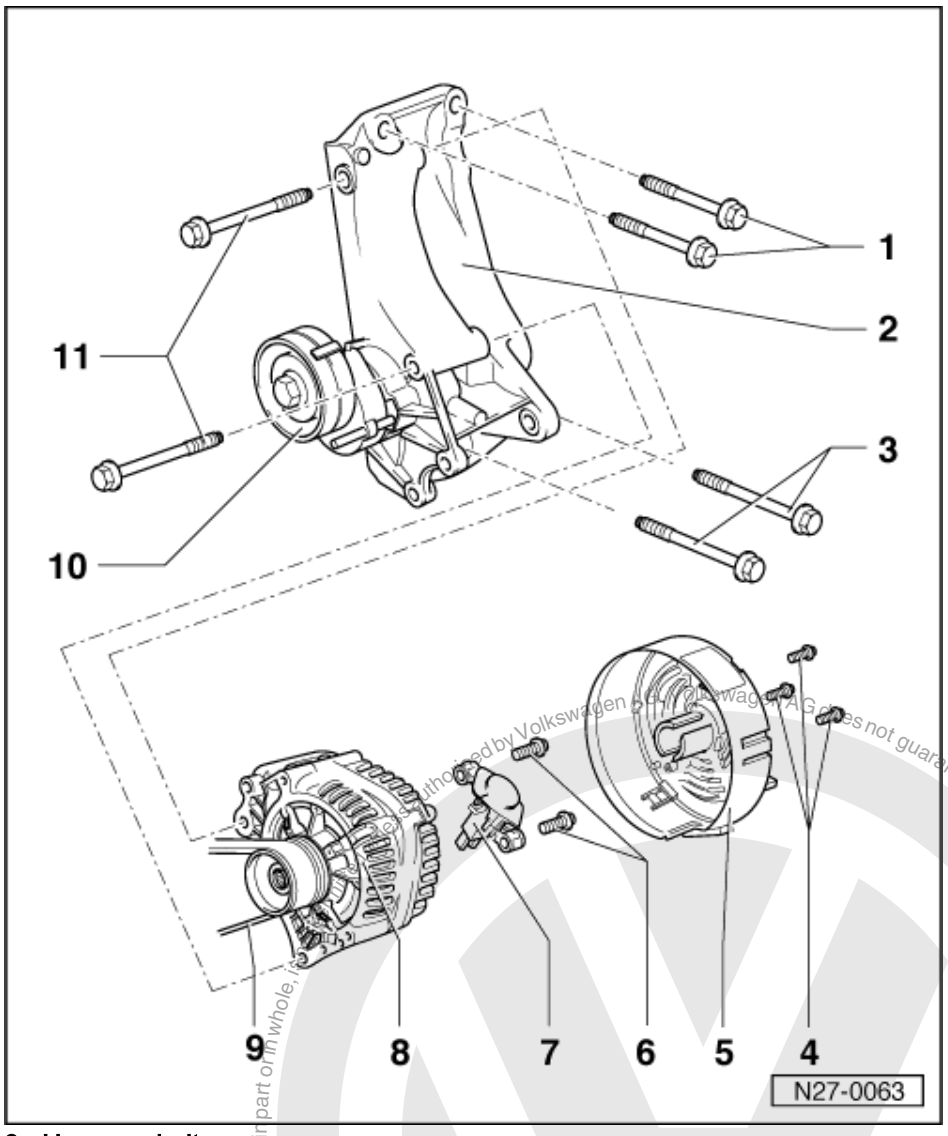


3 Hexagon bolts
- On aluminium block: M10x100 mm, Renew bolts (coated with sealant)
- On cast iron block:
  M10x95 mm
- Tightening sequence:
  Upper right bolt first (item 1), then lower right bolt (item 3), and upper and lower bolts on left last (as seen locking forwards)

4 Hexagon bolts
- M3 x 18mm

5 Protective cap

6 Cross-head screws
- M4 x 25mm

7 Voltage regulator
- Checking carbon brushes => Page 57
- Removing and installing => Page 57

Protected by copyright. Copying for private or commercial purposes, in part or in whole, is not permitted unless authorised by Volkswagen AG. Volkswagen AG does not guarantee or accept any liability with respect to the correctness of information in this document. Copyright by Volkswagen AG.
satelettronica

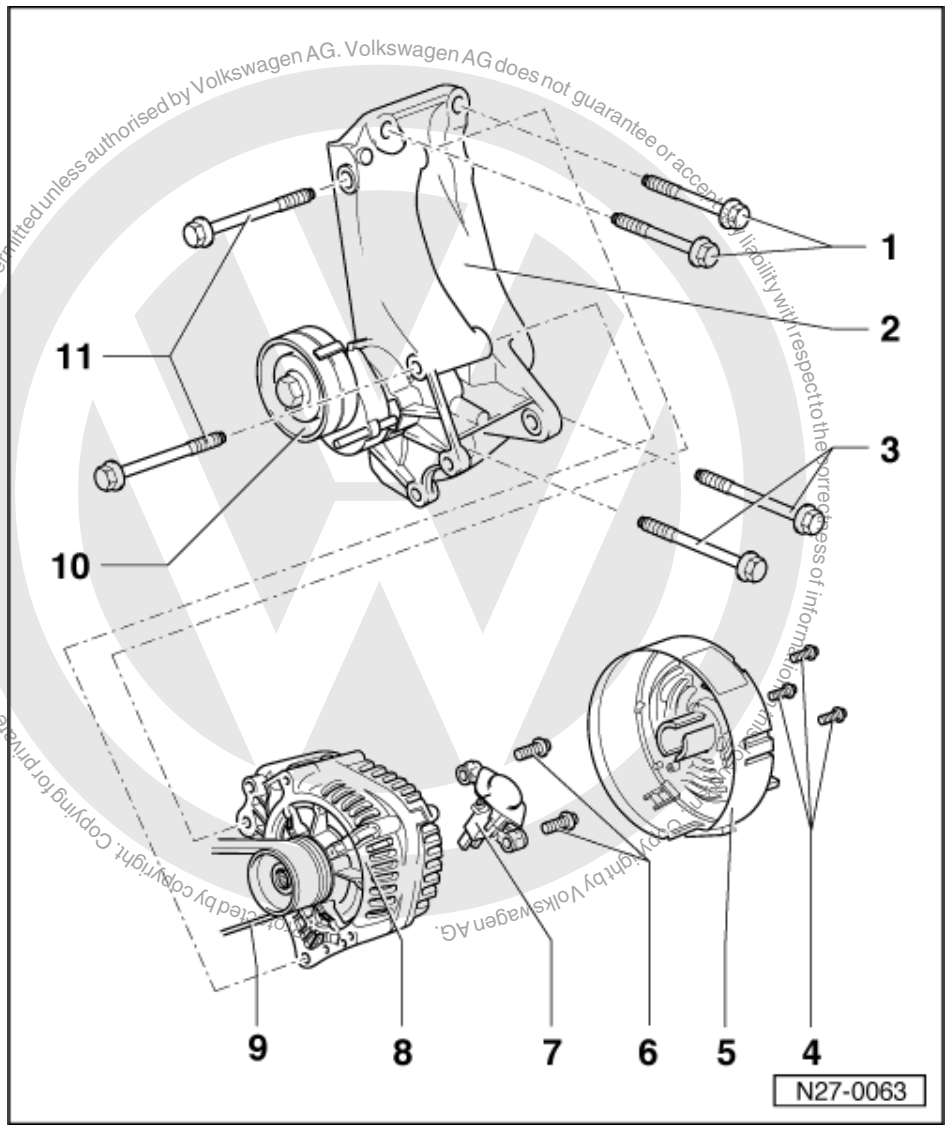


Copyright by Volkswagen AG. Volkswagen AG does not guarantee or accept any liability with respect to the correctness of information. Copying for private or commercial purposes, in part or in whole, is not permitted unless authorised by Volkswagen AG. Copyright. Copying for private or commercial purposes, in part or in whole, is not permitted unless authorised by Volkswagen AG.

8 Alternator
- Tightening torque of B+ => Page 56

9 Ribbed belt
- Removing and installing => Page 53
- Ribbed belt drive
  => Page 49 , Fig. 2

10 Tensioning roller

11 Hexagon bolts
- M8 x 85 mm
- 25 Nm

satelettronica

## 3.5 - 4-cylinder fuel injection engine with power-assisted steering, vehicles 05.99 >

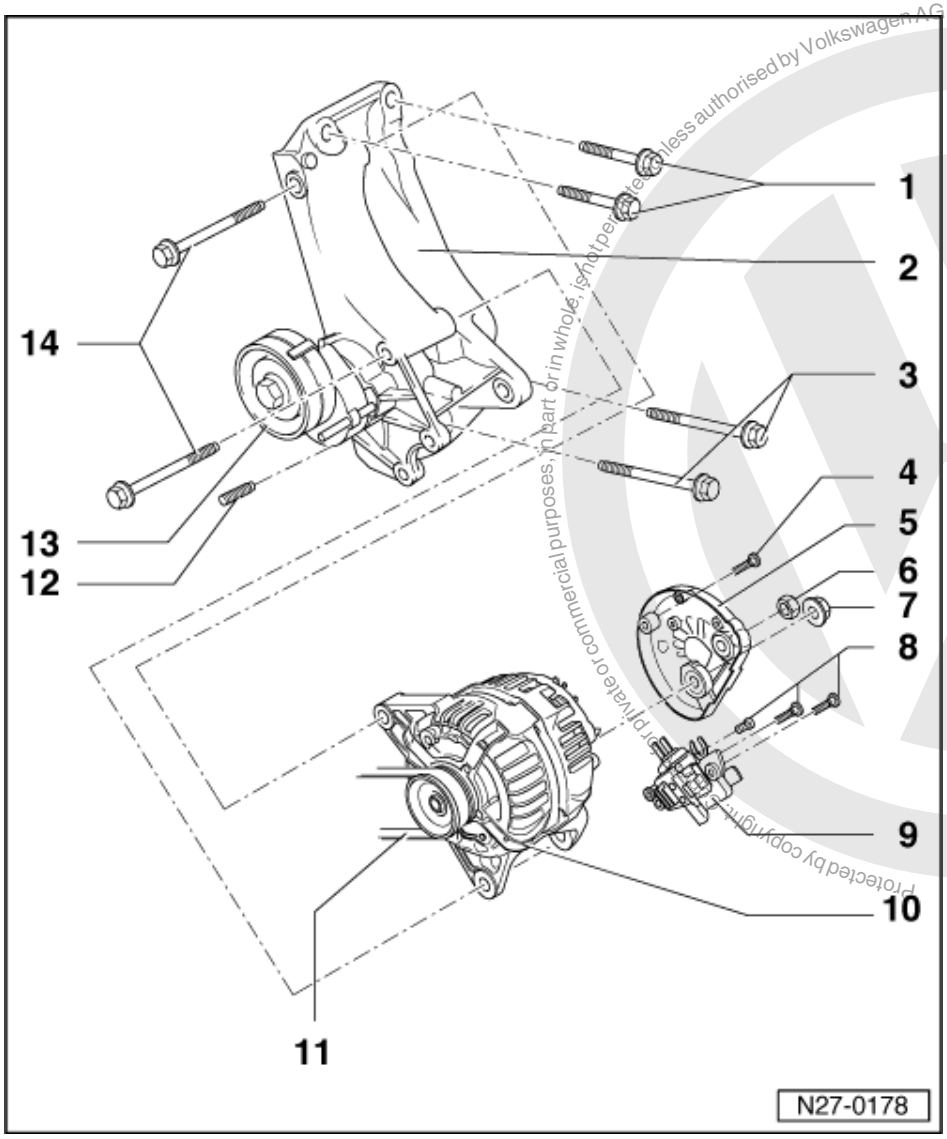


Protected by copyright. Copyright by Volkswagen AG.
Volkswagen AG does not guarantee or accept any liability with respect to the correctness of information in this document. Copyright by Volkswagen AG.
Protected by copyright. Copyright by Volkswagen AG.
Unauthorised use, in whole or in part, for commercial purposes, in part or in whole, is not permitted unless authorised by Volkswagen AG.
satelettronica

1 Hexagon bolts
- M10 x 55mm
- 50 Nm
- On aluminium block: Renew bolts (coated with sealant)
- Tightening sequence:
  Upper right bolt first (item 1), then lower right bolt (item 3), and upper and lower bolts on left last (as seen locking forwards)

2 Bracket

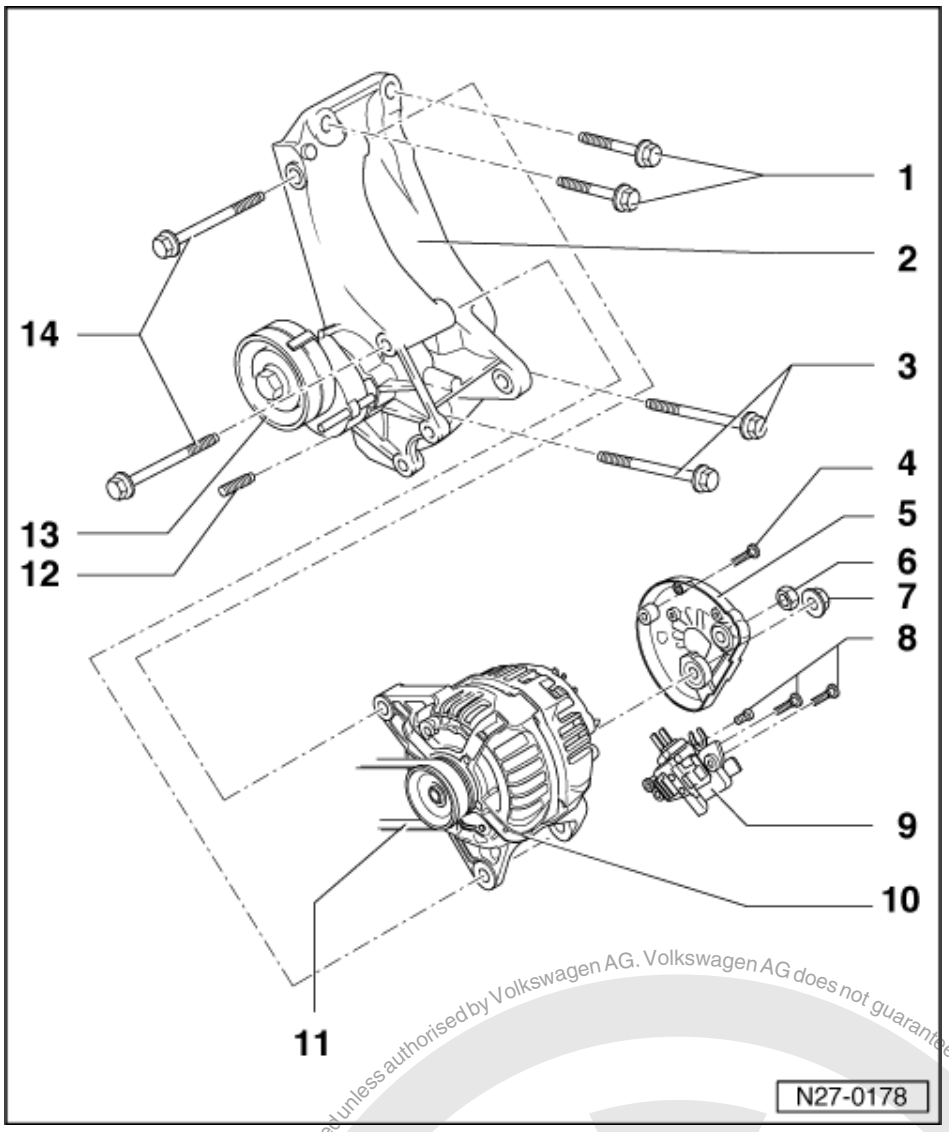


3 Hexagon bolts
- M10 x 100mm
- 50 Nm
- On aluminium block: Renew bolts (coated with sealant)
- Tightening sequence:
  Upper right bolt first (item 1), then lower right bolt (item 3), and upper and lower bolts on left last (as seen locking forwards)

4 Cross-head screws

5 Protective cap

6 Hexagon nut
- M8

7 Hexagon nut
- M8

Protected by copyright. Copying for private or commercial purposes, in part or in full, is not permitted unless authorised by Volkswagen AG. Volkswagen AG does not guarantee or accept any liability with respect to the correctness of information in this document. Copyright by Volkswagen AG.
satelettronica

Copyright by Volkswagen AG. Volkswagen AG does not guarantee or accept any liability with respect to the correctness of information in this document. Copying for private or commercial purposes, in part or in whole, is not permitted unless authorised by Volkswagen AG.

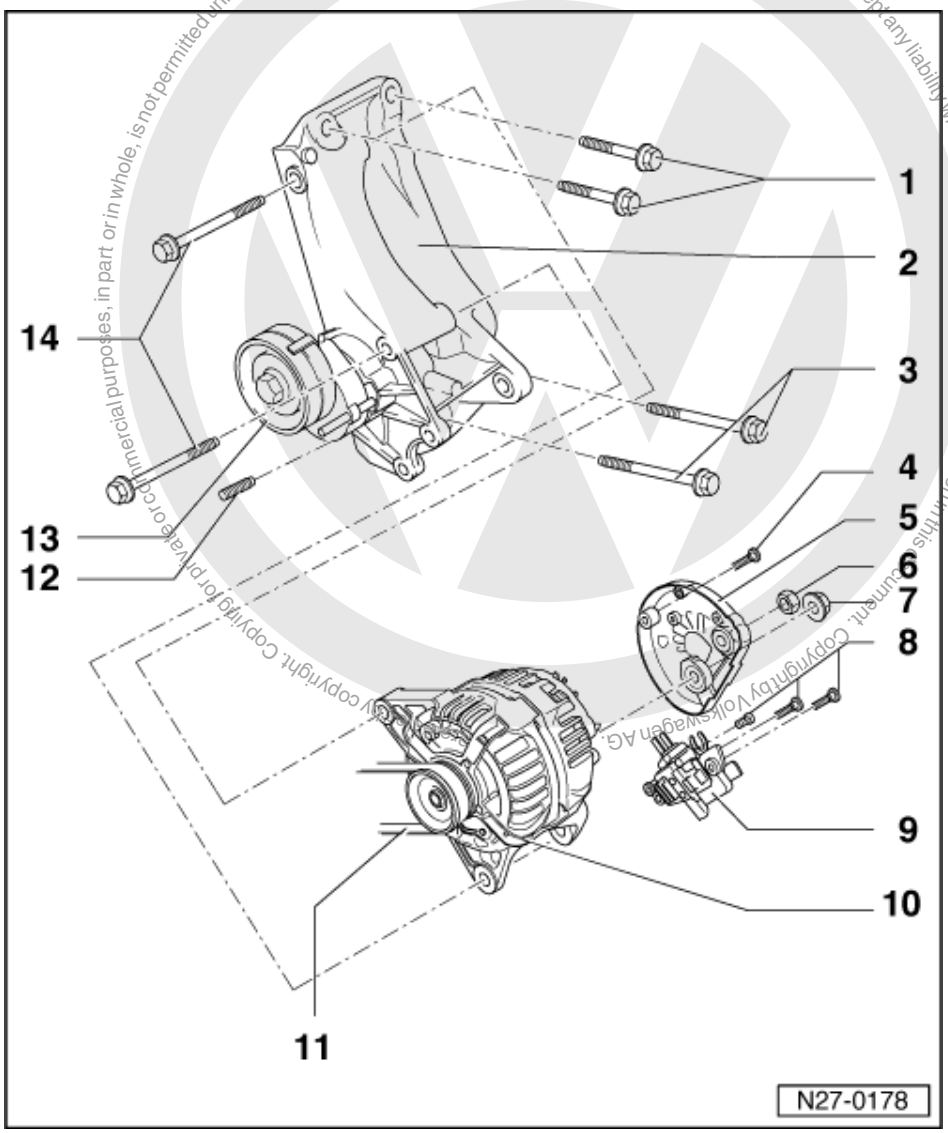


8 Cross-head screws

9 Voltage regulator

- Checking carbon brushes => Page 58
- Removing and installing => Page 59

10 Alternator

- Tightening torque of B+ wire
  => Page 58

11 Ribbed belt

- Removing and installing => Page 53
- Ribbed belt drive
  => Pages 49 , Figs. 2 and 3

12 M8 sealing screw with hexagonal recess

13 Tensioning roller

satelettronica

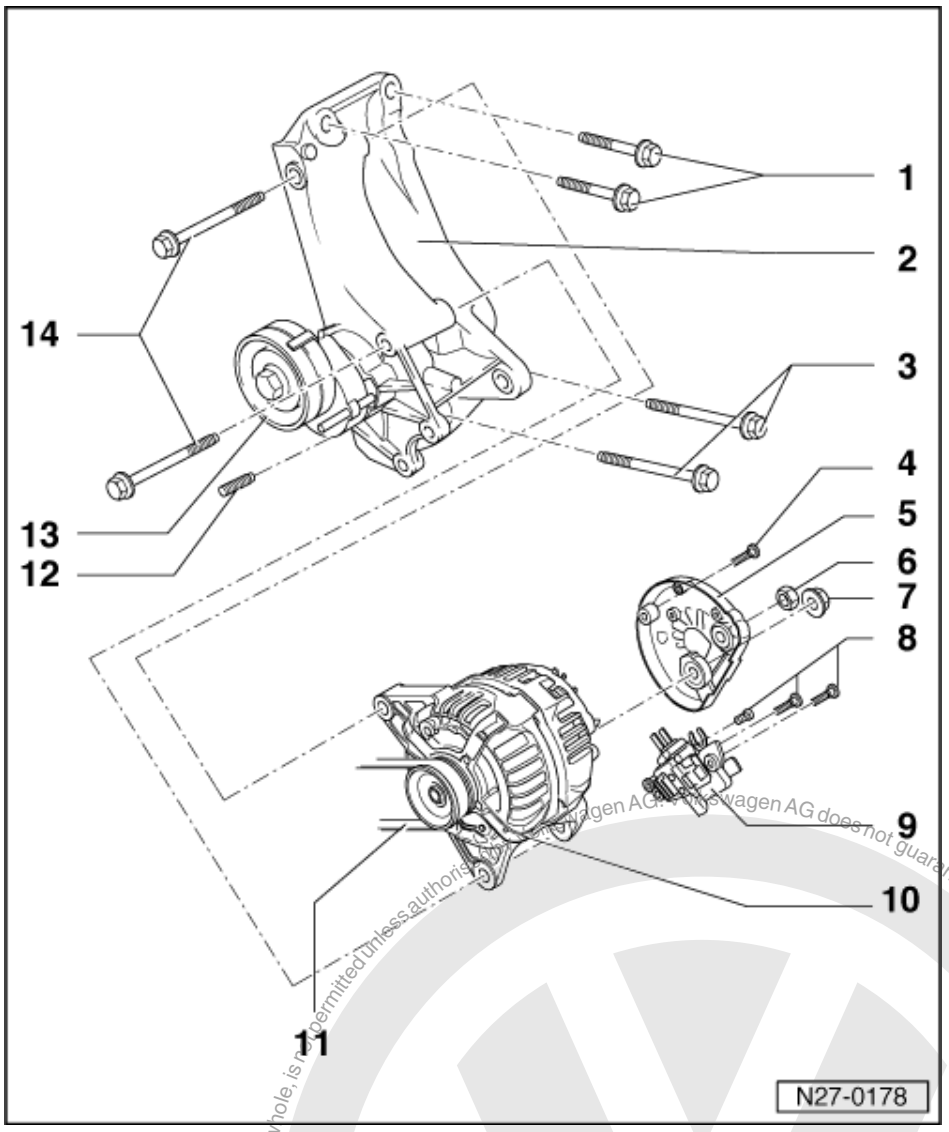


14 Hexagon bolts

- M8 x 85 mm
- 25 Nm

Protected by copyright. Copying for private or commercial purposes, in part or in whole, is not permitted unless authorised by Volkswagen AG. Volkswagen AG does not guarantee or accept any liability with respect to the correctness of information in this document. Copyright by Volkswagen AG.
satelettronica

## 3.6 - 4-cylinder fuel injection engine with air conditioner compressor and power-assisted steering, vehicles > 04.99

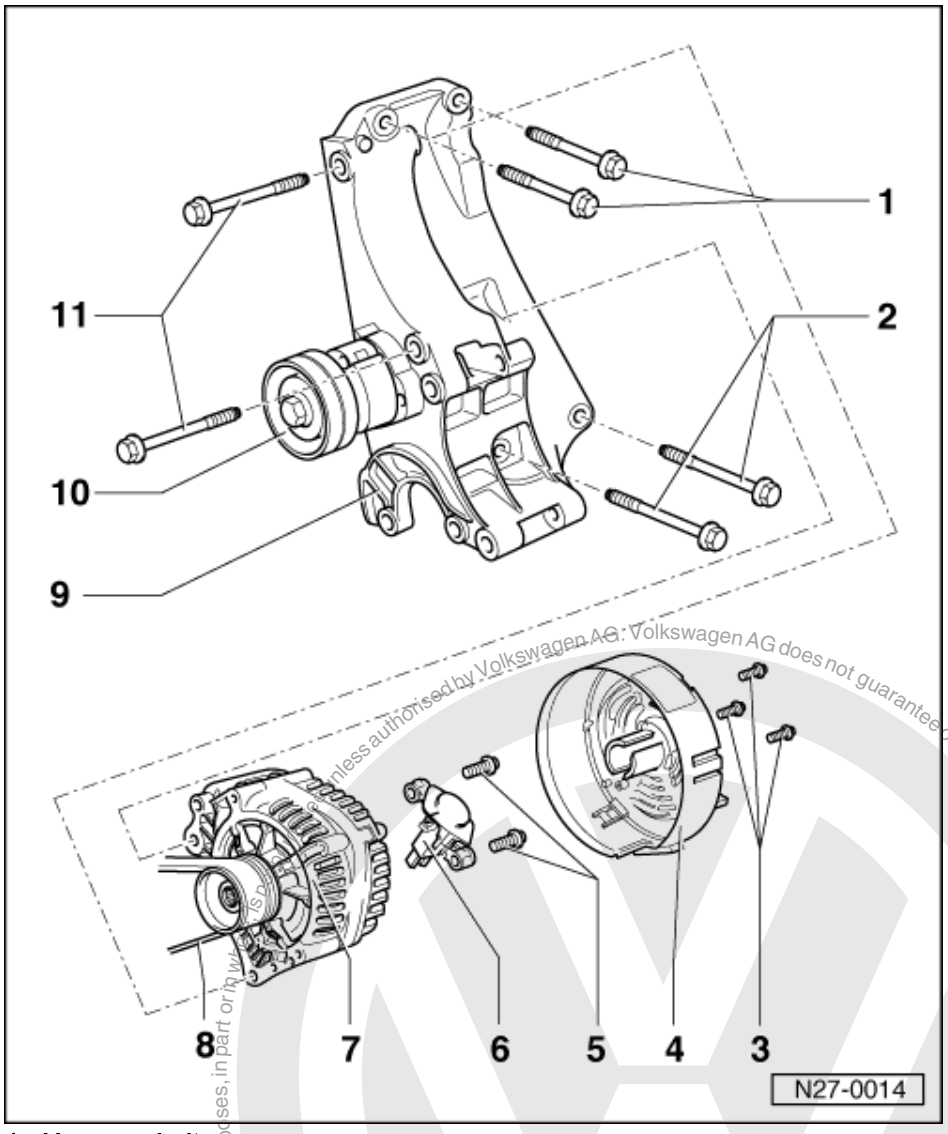


1 Hexagon bolts

- 55 Nm
- On aluminium block: M10x55 mm, Renew bolts (coated with sealant)
- On cast iron block: M10x50 mm
- Tightening sequence:
  Upper right bolt first (item 1), then lower right bolt (item 3), and upper and lower bolts on left last (as seen locking forwards)

Protected by copyright. Copying for private or commercial purposes, in part or in whole, is not permitted unless authorised by Volkswagen AG. Volkswagen AG does not guarantee or accept any liability with respect to the correctness of information in this document. Copyright by Volkswagen AG.
satelettronica

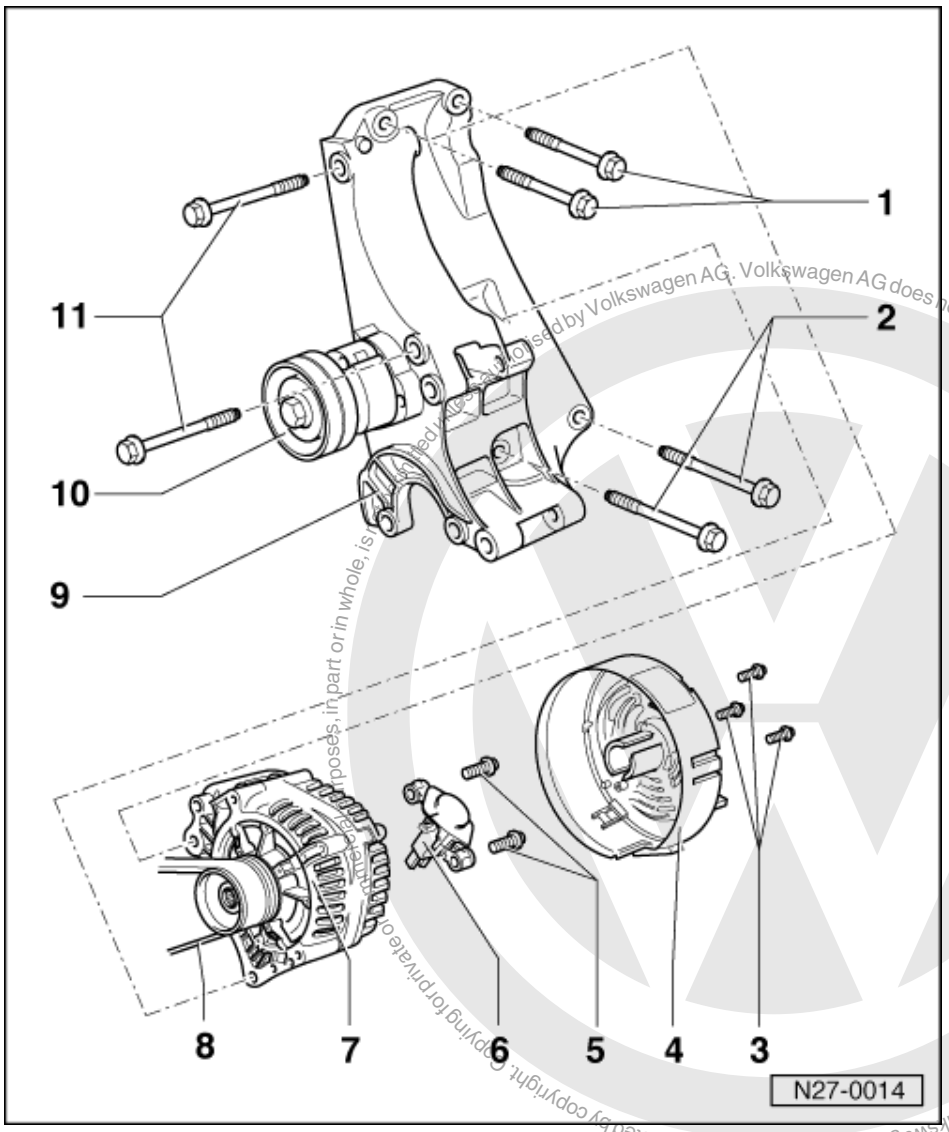


Protected by copyright. Copying for private or commercial purposes, in part or in whole, is not permitted unless authorised by Volkswagen AG. Volkswagen AG does not guarantee or accept any liability with respect to the correctness of information in this document. Copyright by Volkswagen AG.

2 Hexagon bolts
- On aluminium block: M10x100mm, Renew bolts (coated with sealant)
- On cast iron block:
  M10x95 mm
- Tightening sequence:
  Upper right bolt first (item 1), then lower right bolt (item 3), and upper and lower bolts on left last (as seen locking forwards)

3 Hexagon bolts
- M3 x 18mm

4 Protective cap

5 Cross-head screws
- M4 x 25mm

satelettronica

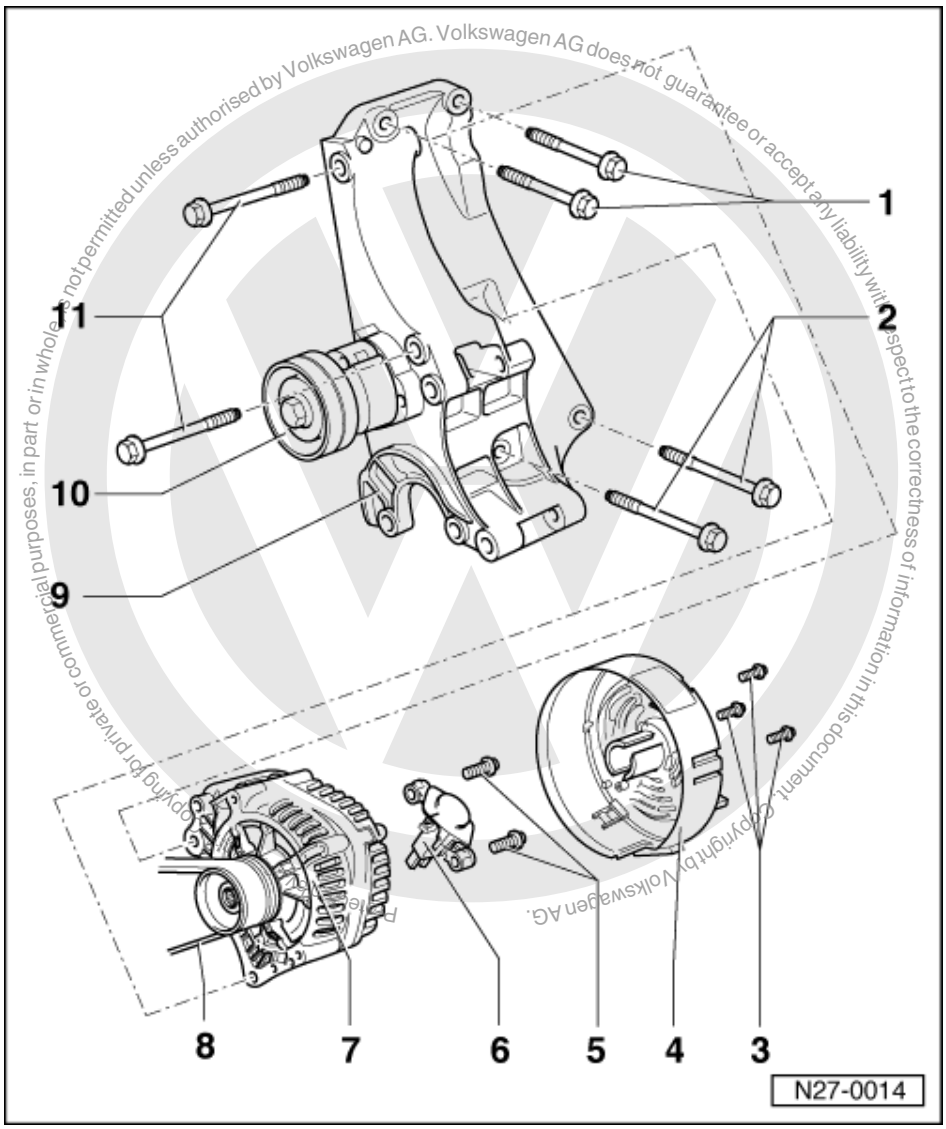


Copyright by Volkswagen AG. Volkswagen AG does not guarantee or accept any liability with respect to the correctness of information in this document. Copying for private or commercial purposes, in part or in whole, is not permitted unless authorised by Volkswagen AG.

6 Voltage regulator
- Checking carbon brushes => Page 57
- Removing and installing => Page 57

7 Alternator
- Tightening torque of B+ => Page 56

8 Ribbed belt
- Removing and installing => Page 53
- Ribbed belt drive
  => Pages 50 , Fig. 4 , 5 and 6

9 Bracket

10 Tensioning roller

11 Hexagon bolts
- M8 x 85 mm
- 25 Nm

satelettronica

## 3.7 - 4-cylinder fuel injection engine with power-assisted steering and air conditioner compressor, vehicles 05.99 >

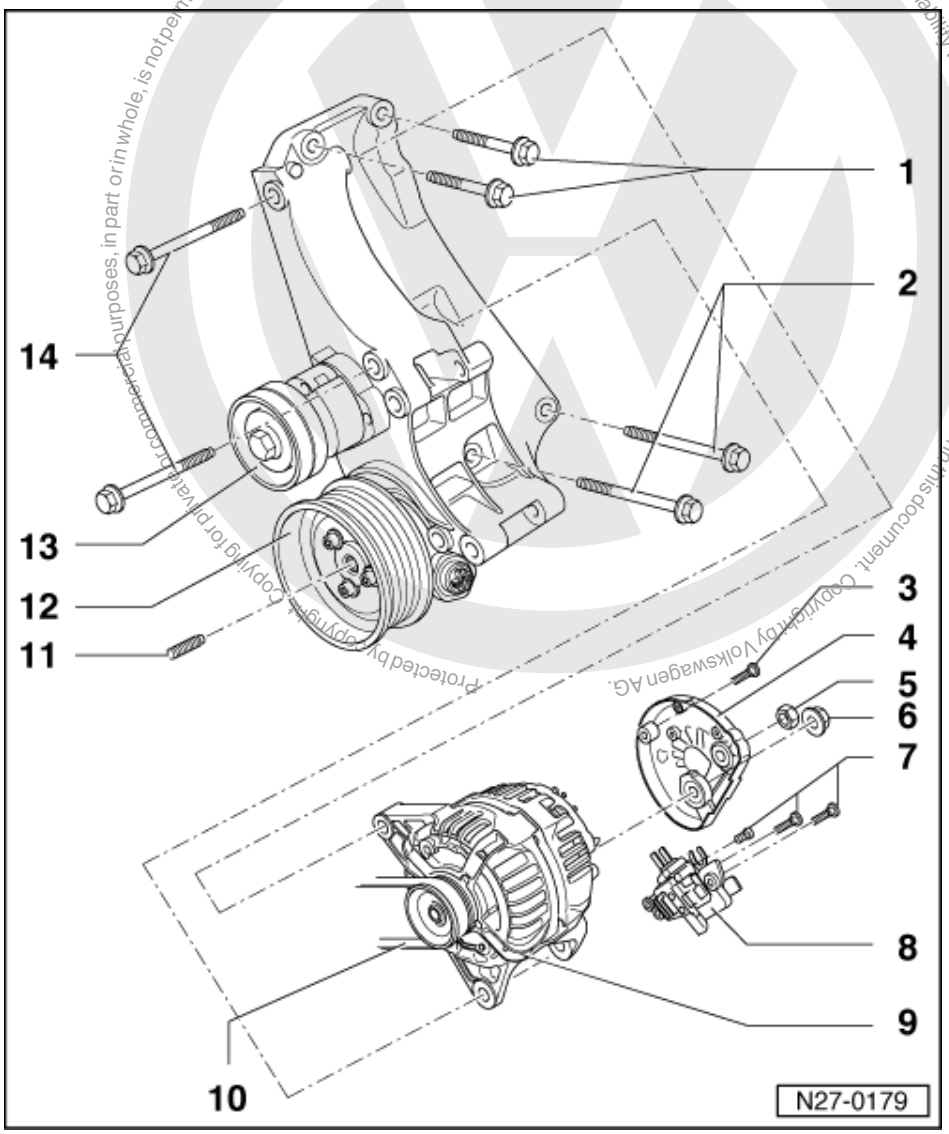


1 Hexagon bolts
- M10x50 mm
- 45 Nm
- On aluminium block: Renew bolts (coated with sealant)
- Tightening sequence:
  Upper right bolt first (item 1), then lower right bolt (item 3), and upper and lower bolts on left last (as seen locking forwards)

satelettronica

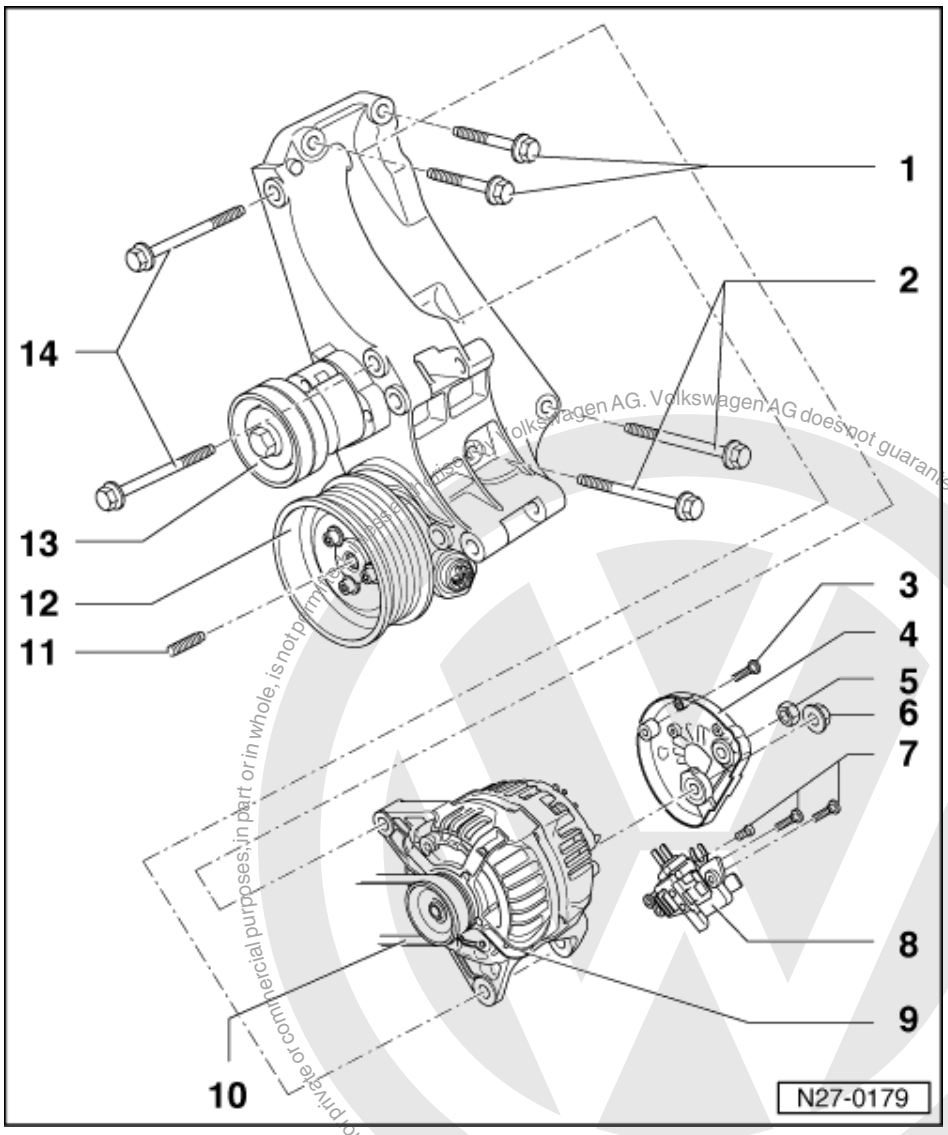


Copyright by Volkswagen AG. Volkswagen AG does not guarantee or accept any liability with respect to the correctness of information in this document. Copyright by Volkswagen AG. Protected by copyright. Copying for private or commercial purposes, in part or in whole, is not permitted unless authorised by Volkswagen AG.

2 Hexagon bolts
- M10x95 mm
- 45 Nm
- On aluminium block: Renew bolts (coated with sealant)
- Tightening sequence:
  Upper right bolt first (item 1), then lower right bolt (item 2), and upper and lower bolts on left last (as seen locking forwards)

3 Cross-head screw

4 Protective cap

5 Hexagon nut
- M8

6 Hexagon nut
- M8

satelettronica

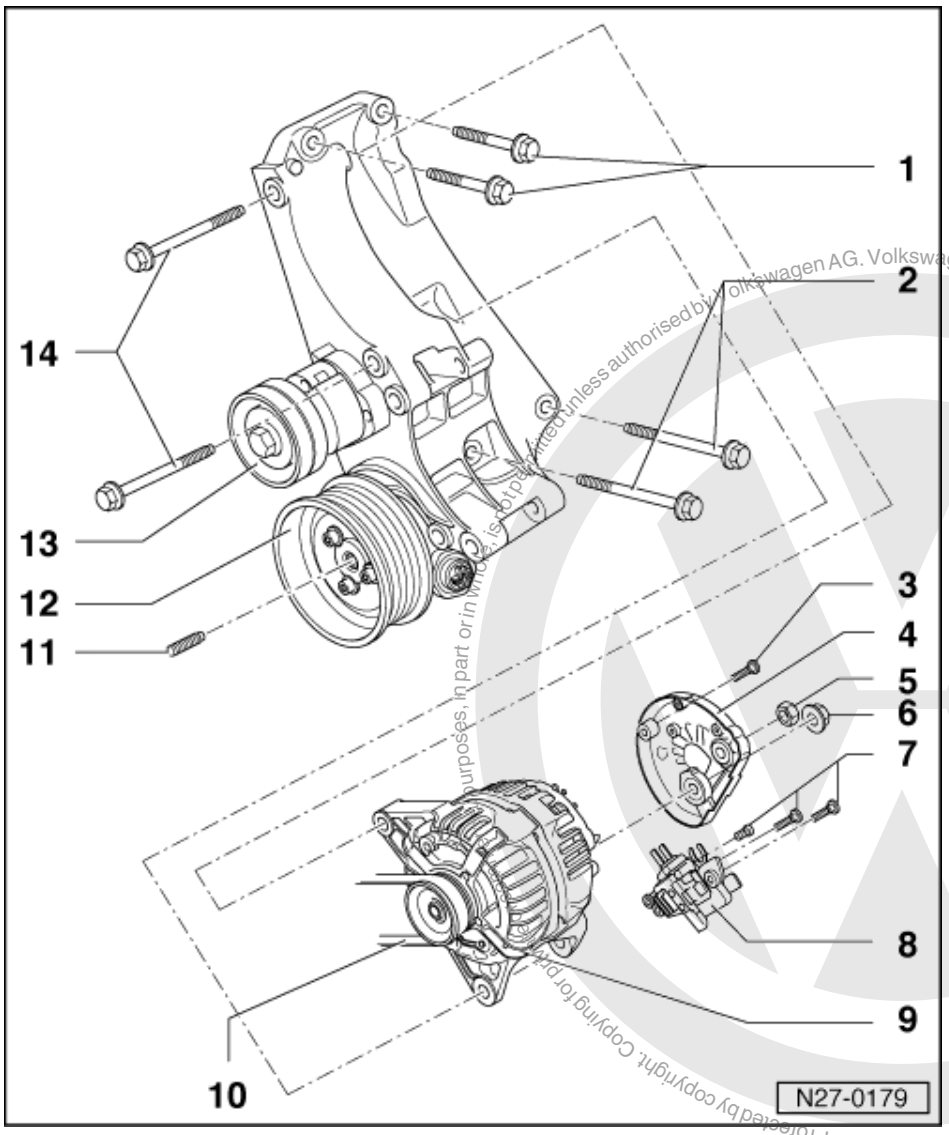


Protected by copyright. Copying for private or commercial purposes, in part or in whole, is not permitted unless authorised by Volkswagen AG. Volkswagen AG does not guarantee or accept any liability with respect to the correctness of information in this document. Copyright by Volkswagen AG.
satelettronica

7 Cross-head screw

8 Voltage regulator

- Checking carbon brushes => Page 58
- Removing and installing => Page 59

9 Alternator

- Tightening torque of B+ wire => Page 58

10 Ribbed belt

- Removing and installing => Page 53
- Ribbed belt drive => Pages 50 , Fig. 4 , 5 and 6

11 M8 sealing screw with hexagonal recess

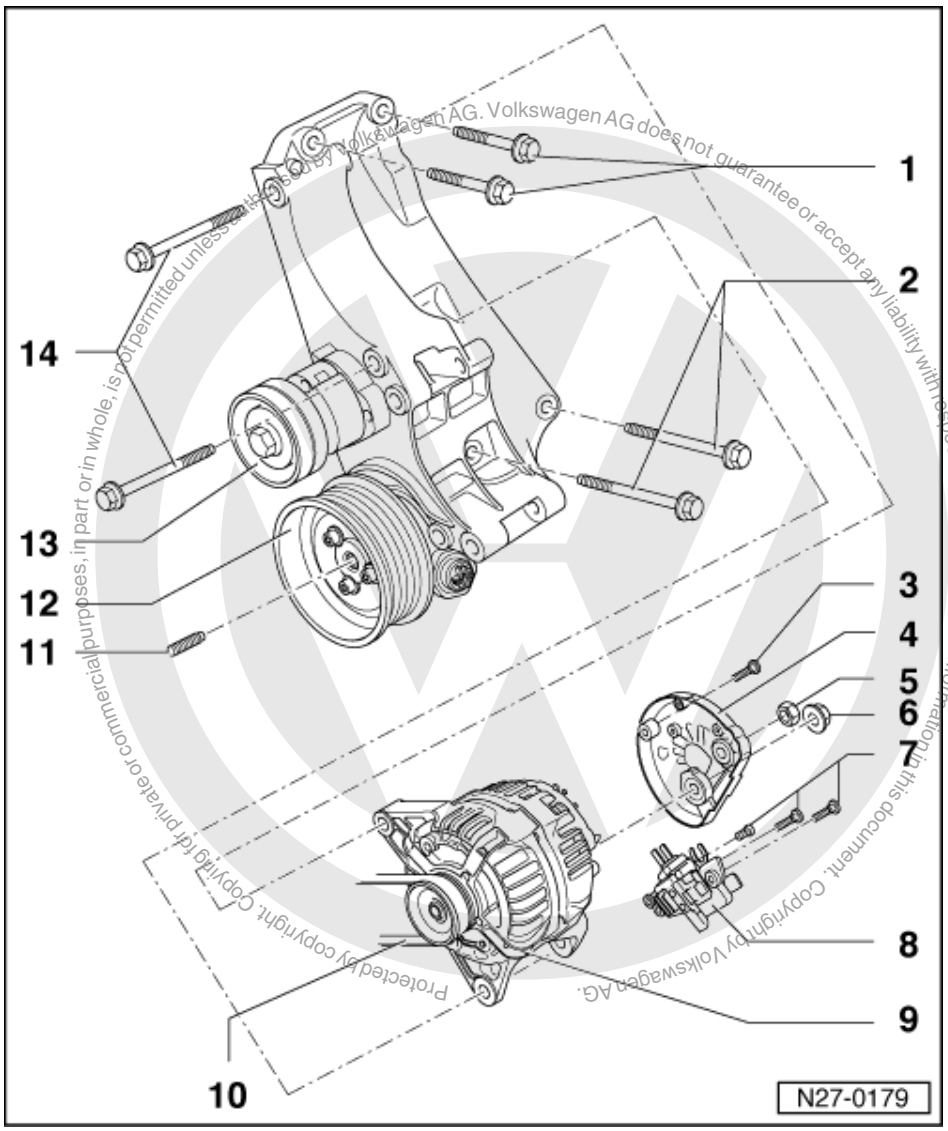


Protected by copyright. Copyright for private or commercial purposes, in part or in whole, is not permitted unless authorised by Volkswagen AG. Volkswagen AG does not guarantee or accept any liability with respect to the correctness of information in this document. Copyright by Volkswagen AG.

12 Bracket
13 Tensioning roller
14 Hexagon bolts
- M8 x 85 mm
- 25 Nm

satelettronica

## 3.8 - 4-cyl. diesel engine, vehicles > 04.99

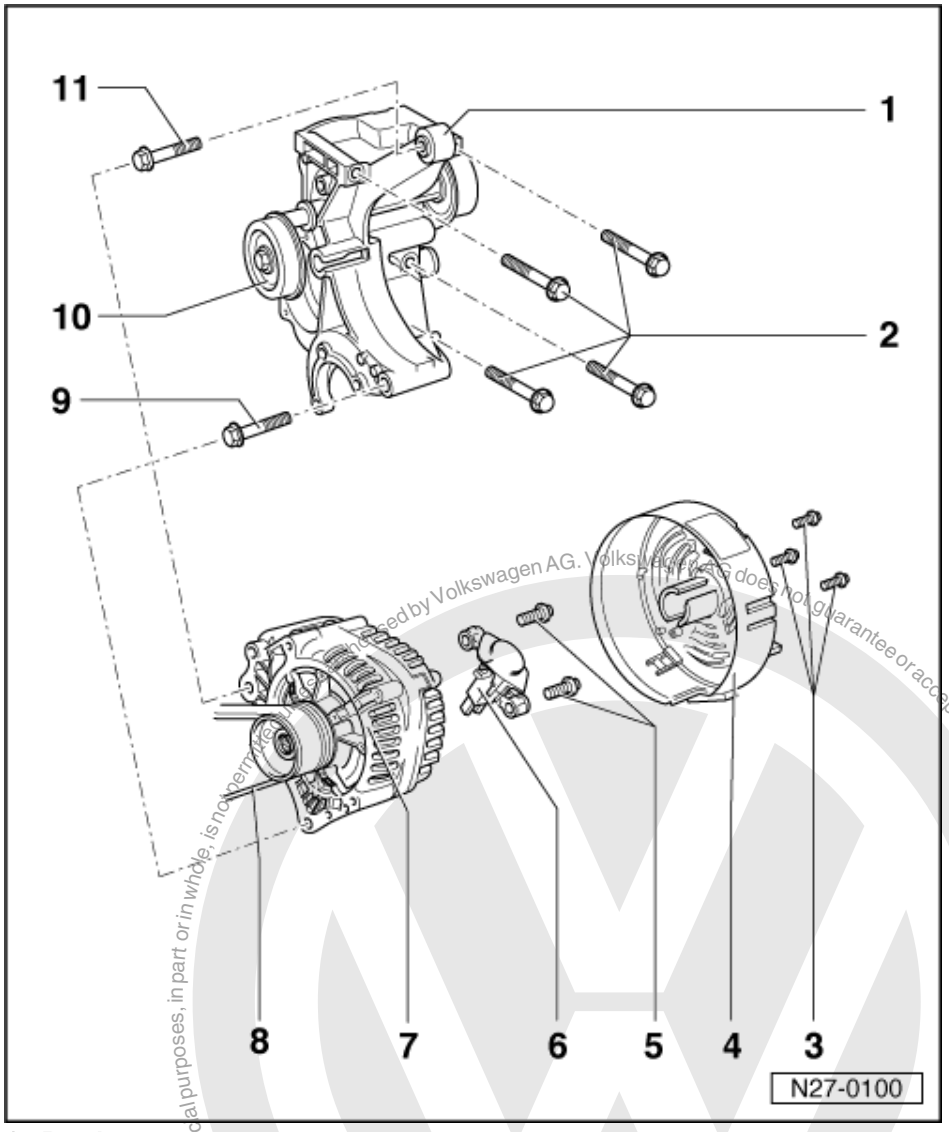


1 Bracket
- Removing and installing:

=> 4-Cyl. Diesel engine mechanics: Repair group 19; Removing and installing coolant pump and compact bracket

2 Hexagon bolts
- M8 x 85 mm
- 25 Nm
- Observe tightening sequence:

=> 4-Cyl. Diesel engine mechanics: Repair group 19; Removing and installing coolant pump and compact bracket

3 Hexagon bolts
- M3 x 18mm

4 Protective cap

5 Cross-head screws

Protected by copyright. Copying for private or commercial purposes, in part or in whole, is not permitted unless authorised by Volkswagen AG. Volkswagen AG does not guarantee or accept any liability with respect to the correctness of information in this document. Copyright by Volkswagen AG.
satelettronica

- M4 x 25mm

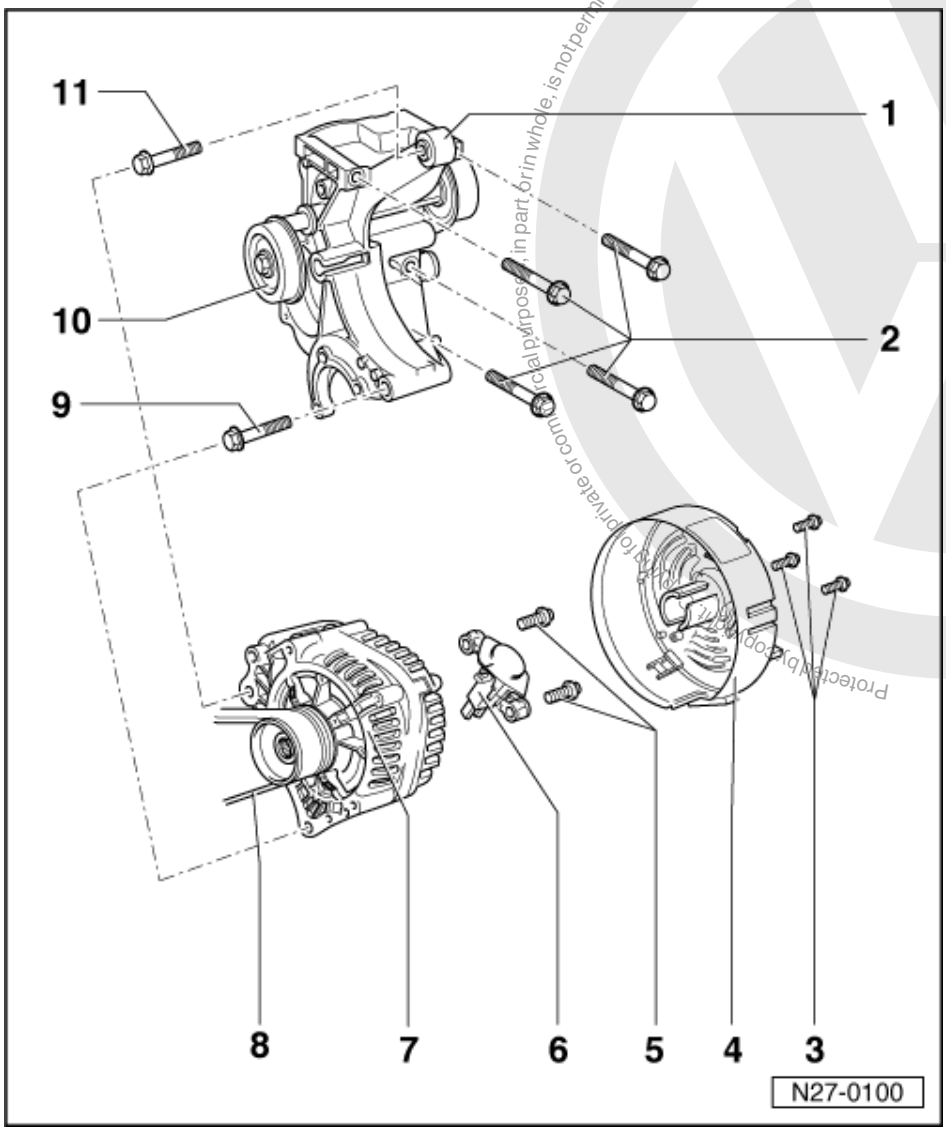


6 Voltage regulator
- Checking carbon brushes => Page 57
- Removing and installing => Page 57

7 Alternator
- Tightening torque of B+ => Page 56

8 Ribbed belt
- Removing and installing => Page 54
- Ribbed belt drive
  => Page 51 , Fig. 7

9 Hexagon bolt
- 25 Nm

10 Tensioning roller

11 Hexagon bolt
- 25 Nm

Protected by copyright. Copying for private or commercial purposes, in part, or in whole, is not permitted unless authorised by Volkswagen AG. Volkswagen AG does not guarantee or accept any liability with respect to the correctness of information in this document. Copyright by Volkswagen AG.
satelettronica

## 3.9 - 4-cyl. diesel engine vehicles 05.99 >

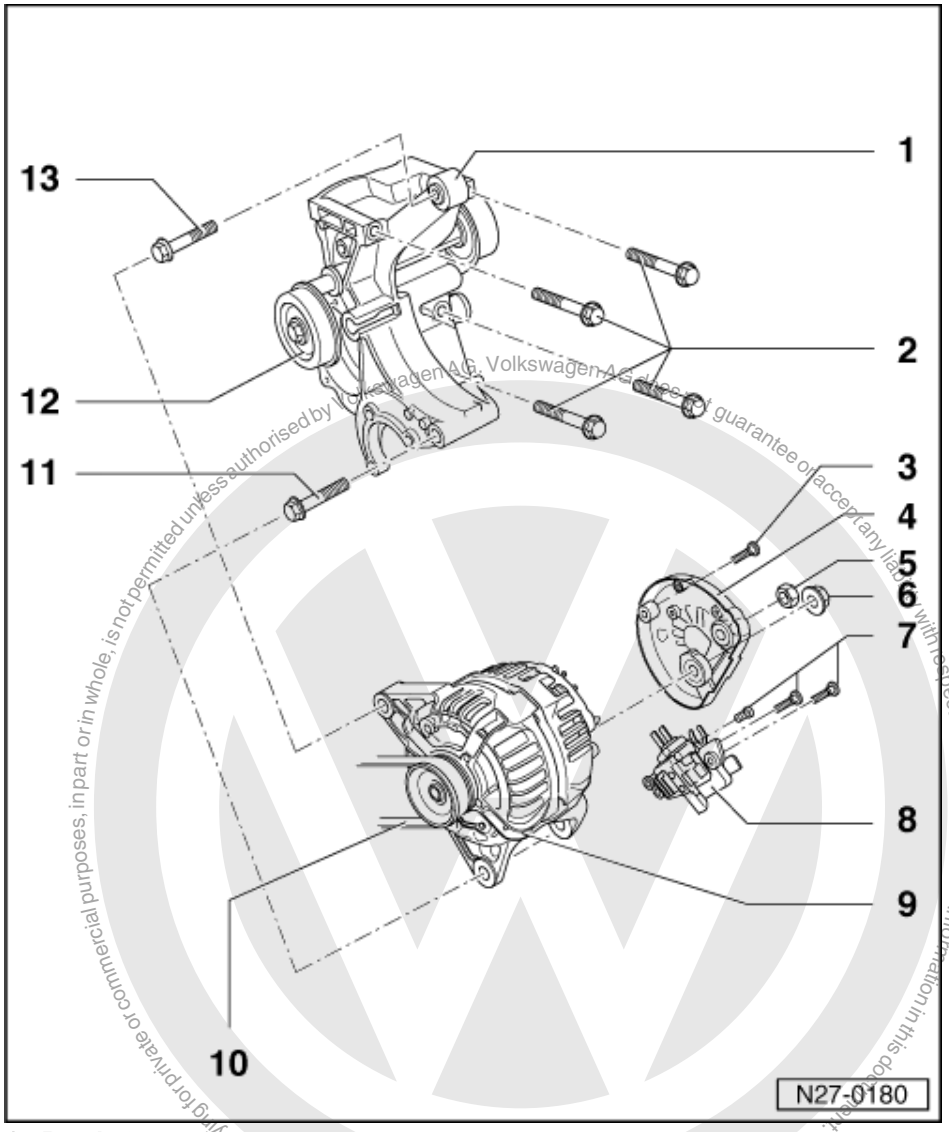


1 Bracket
- Removing and installing:

=> 4-Cyl. Diesel engine mechanics: Repair group 19; Removing and installing coolant pump and compact bracket

2 Hexagon bolts
- M8 x 85 mm
- 25 Nm
- Observe tightening sequence:

=> 4-Cyl. Diesel engine mechanics: Repair group 19; Removing and installing coolant pump and compact bracket

3 Cross-head screw
4 Protective cap
5 Hexagon nut
- M8

6 Hexagon nut

satelettronica

- M8

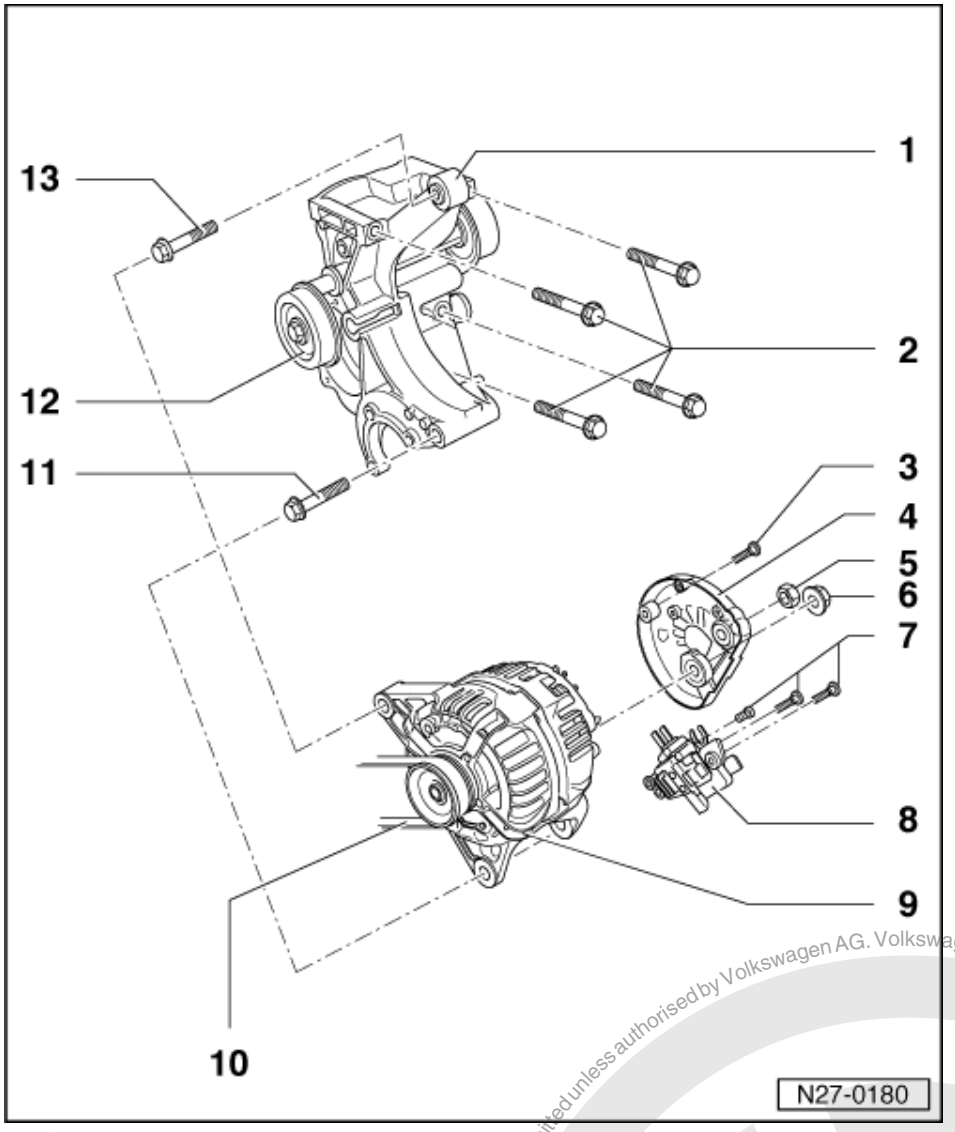


7 Cross-head screw
8 Voltage regulator
- Checking carbon brushes => Page 58
- Removing and installing => Page 59

9 Alternator
- Tightening torque of B+ wire => Page 58

10 Ribbed belt
- Removing and installing => Page 54
- Ribbed belt drive => Page 51 , Fig. 7

11 Hexagon bolt
- M8 x 85 mm
- 25 Nm

12 Tensioning roller

13 Hexagon bolt
- M8 x 85 mm
- 25 Nm

Protected by copyright. Copying for private or commercial purposes, in part or in whole, not permitted unless authorised by Volkswagen AG. Volkswagen AG does not guarantee or accept any liability with respect to the correctness of information in this document. Copyright by Volkswagen AG.
satelettronica

## 3.10 - 3-Cyl. Diesel engine

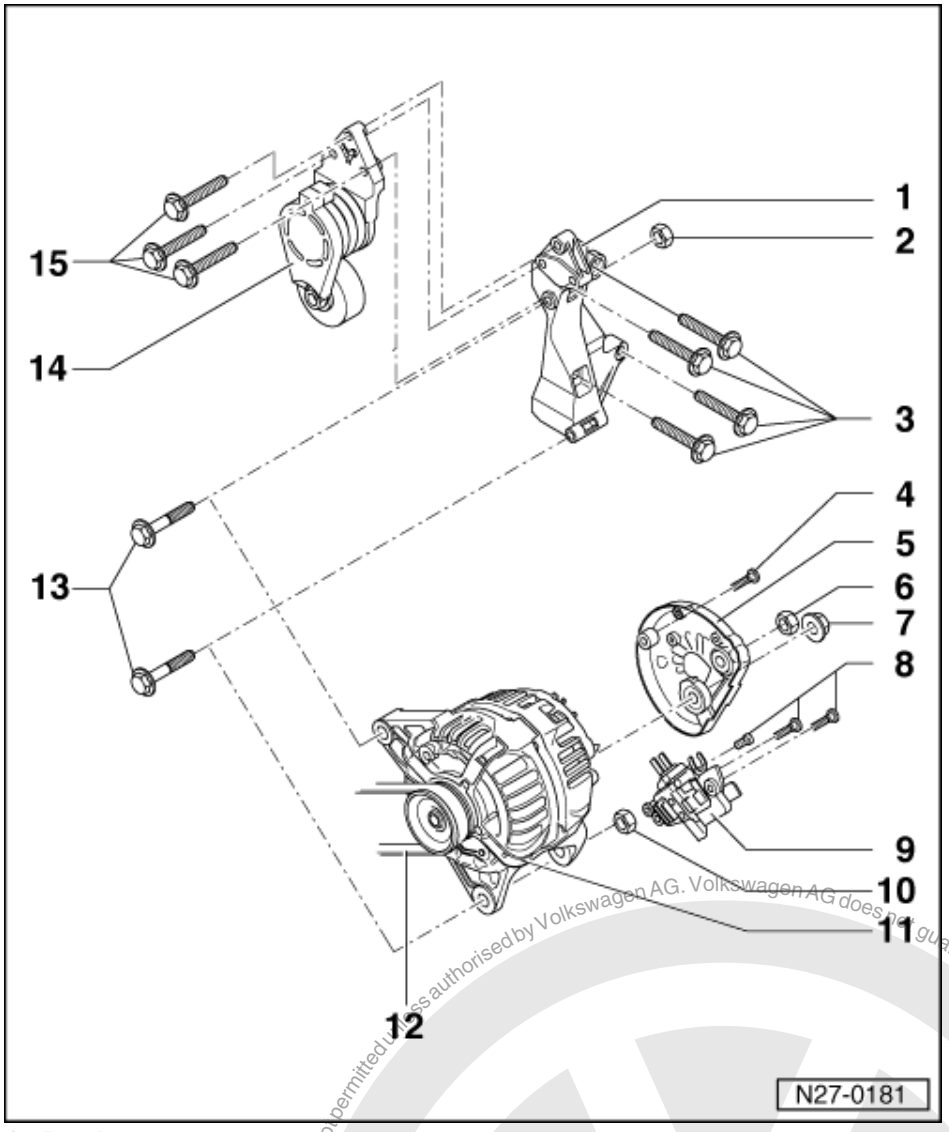


1 Bracket
2 Hexagon nut
- M8

3 Hexagon bolts
- M10 x 55mm
- 45 Nm

4 Cross-head screw
5 Protective cap
6 Hexagon nut
- M8

7 Hexagon nut
- M8

8 Cross-head screw
9 Voltage regulator
- Checking carbon brushes => Page 58
- Removing and installing => Page 59

Protected by copyright. Copying for private or commercial purposes, in part or in whole, is not permitted unless authorised by Volkswagen AG. Volkswagen AG does not guarantee or accept any liability with respect to the correctness of information in this document. Copyright by Volkswagen AG.
satelettronica

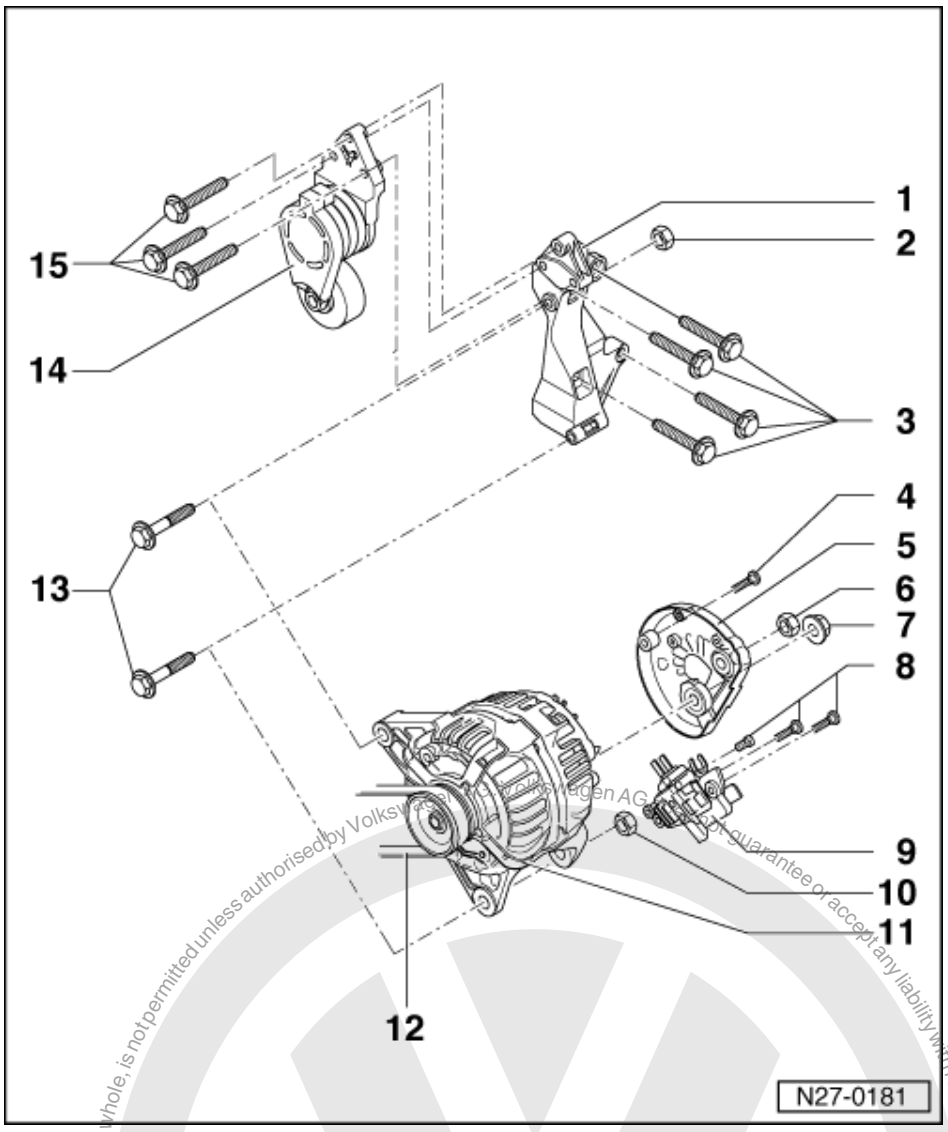


10 Hexagon nut
- M8

11 Alternator
- Tightening torque of B+ wire
  => Page 58

12 Ribbed belt
- Removing and installing => Page 55
- Ribbed belt drive
  => Page 51 , Fig. 8

13 Hexagon bolts
- M8 x 85 mm
- 25 Nm

14 Tensioning roller

15 Hexagon bolts
- M8 x 60mm

Protected by copyright. Copyright by Volkswagen AG.
Copying for private or commercial purposes, in part or in whole, is not permitted unless authorised by Volkswagen AG. Volkswagen AG does not guarantee or accept any liability with respect to the correctness of information in this document.
satelettronica

## 3.11 - Ribbed belt drive

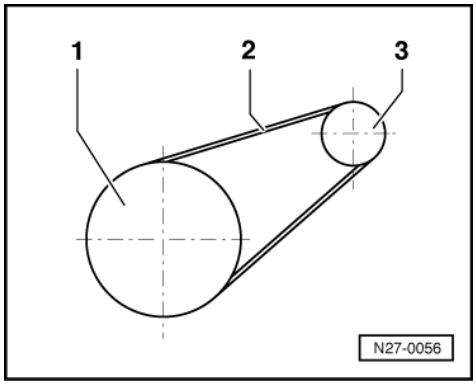


Fig.1 4-Cyl. injection engine with basic belt drive

1 - Crankshaft/vibration damper/pulley
2 - Ribbed belt - Crankshaft/vibration damper and alternator
3 - Pulley - Alternator

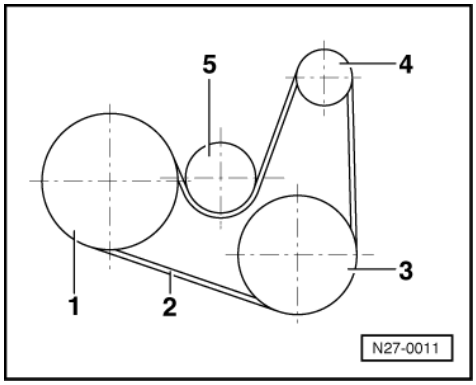


Fig. 2 4-cyl. injection engine with power-assisted steering vane pump (8 V engines)

1 - Crankshaft/vibration damper/pulley
2 - Ribbed belt - Crankshaft/vibration damper, tensioning roller, alternator and power steering vane pump
3 - Pulley - P.A.S. vane pump
4 - Pulley - Alternator
5 - Tensioner

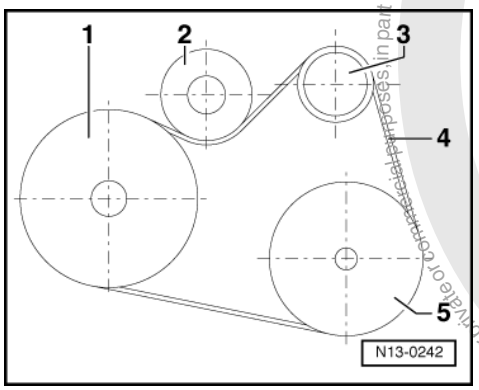


Fig. 3 4-cylinder injection engine with P.A.S vane pump, engine codes (16 V engines)

1 - Crankshaft/vibration damper/pulley
2 - Tensioning roller

Protected by copyright. Copying for private or commercial purposes, in part or in whole, is not permitted unless authorised by Volkswagen AG. Volkswagen AG does not guarantee or accept any liability with respect to the correctness of information in this document. Copyright by Volkswagen AG.
satelettronica

3 - Pulley - Alternator
4 - Ribbed belt - Crankshaft/vibration damper, tensioning roller, alternator and power steering vane pump
5 - Pulley - P.A.S. vane pump

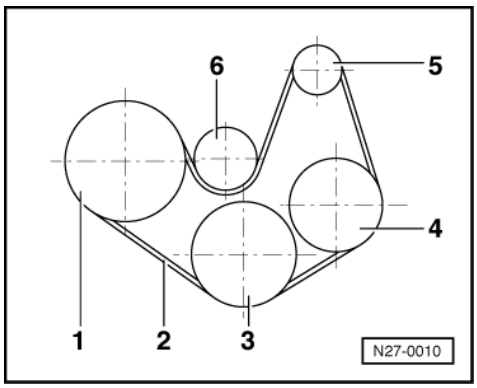


Fig.4 4-cylinder injection engine with air conditioner compressor and P.A.S vane pump (8 V engines)

1 - Crankshaft/vibration damper/pulley
2 - Ribbed belt - Crankshaft/vibration damper, tensioning roller, alternator, air conditioner compressor and power steering vane pump
3 - Pulley - P.A.S. vane pump
4 - Pulley - Air conditioner compressor
5 - Pulley - Alternator
6 - Tensioning roller

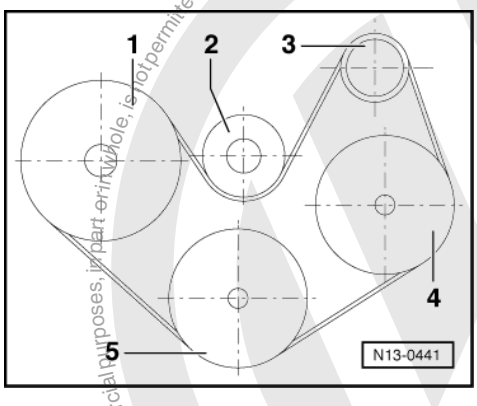


Fig.5 4-cylinder injection engine with air conditioner compressor and P.A.S vane pump (1.4 ltr. 16 V engines)

1 - Crankshaft/vibration damper/pulley
2 - Tensioning roller
3 - Pulley - Alternator
4 - Pulley - Air conditioner compressor
5 - Pulley - P.A.S. vane pump

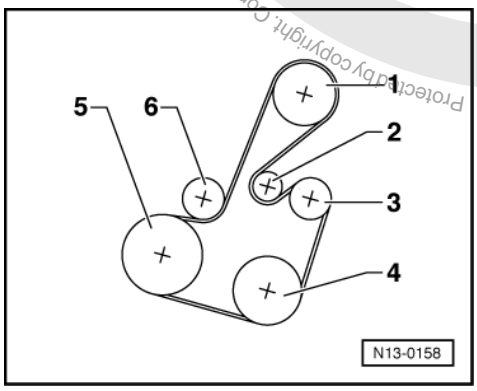


Protected by copyright. Copyright by Volkswagen AG.
Copyright by Volkswagen AG. Volkswagen does not guarantee or accept any liability with respect to the correctness of information in this document.
This document is for private and non-commercial purposes, in part or in whole, is not permitted without the express consent of Volkswagen.
satelettronica

Fig.6 4-cylinder injection engine with air conditioner compressor and P.A.S vane pump (1.6 ltr. 16 V engines)

1 - Pulley - P.A.S. vane pump
2 - Guide roller
3 - Pulley - Alternator
4 - Pulley - Air conditioner compressor
5 - Crankshaft/vibration damper/pulley
6 - Tensioning roller

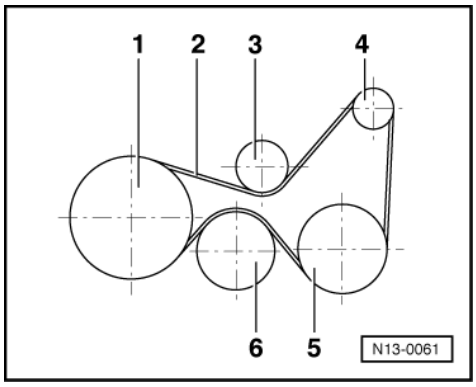


Fig. 7 4-cylinder Diesel engine with P.A.S vane pump

1 - Crankshaft/vibration damper/pulley
2 - Ribbed belt - tensioning roller, alternator, power steering vane pump, coolant pump and crankshaft/ vibration damper
3 - Tensioning roller
4 - Pulley - Alternator
5 - Pulley - P.A.S. vane pump
6 - Pulley - Coolant pump

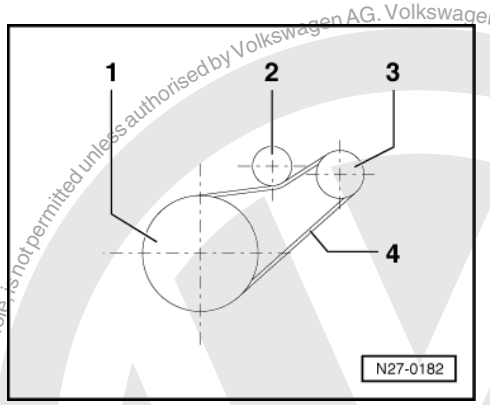


Fig. 8 3-cylinder Diesel engine

1 - Crankshaft/vibration damper/pulley
2 - Tensioning roller
3 - Pulley - Alternator
4 - Ribbed belt - Tensioning roller, alternator and crankshaft/vibration damper

## 3.12 - Checking V-belt

- Check for:
  - Sub-surface cracks (cracks, core ruptures, cross sectional breaks)
  - Layer separation (top layer, draw strands)
  - Base break-up
  - Fraying of draw strands
  - Flank wear (material wear, frayed flanks, flank hardening (glassy flanks), surface cracks)

Copyright by Volkswagen AG. Volkswagen AG does not guarantee or accept any liability with respect to the correctness of information in this document. Copying for private or commercial purposes, in part or in whole, is not permitted unless authorised by Volkswagen AG.
satelettronica

- Traces of oil and grease

*Notes:*
- Before removing the V-belt mark direction of rotation. Installing opposite to the direction of rotation leads to belt damage!
- If damage is established, replace V-belt immediately to prevent failure or functional faults!

## 3.13 - Checking ribbed belt

*Note:*
*It is essential to renew the ribbed belt if a fault is found. This will avoid possible break-downs or operating problems.*
- Crank engine by hand and check ribbed ribbed belt for:
  - Sub-surface cracks (cracks, core ruptures, cross sectional breaks)
  - Layer separation (top layer, cord strands)
  - Base break-up
  - Fraying of cord strands
  - Flank wear (material wear, frayed flanks, flank brittleness -glassy flanks-, surface cracks)

## 3.14 - Removing and installing ribbed belt

*Note:*
- If a used ribbed belt is to be reused, mark direction of rotation before removing. When installing used ribbed belts observe the direction of rotation marked on removal. Installing opposite to the direction of rotation leads to belt damage!
- It is not necessary to adjust the ribbed belt tension, as a spring loaded tensioner guarantees the best possible belt tension.

**4-cyl. injection engine with basic belt drive**

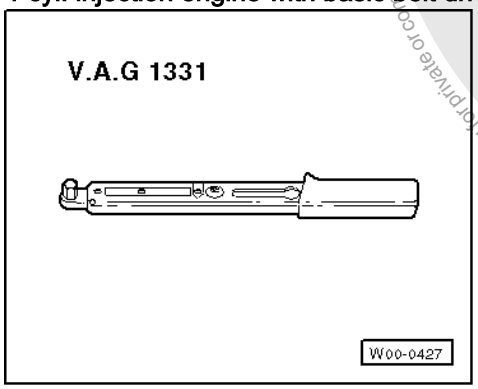


**Special tools, testers, measuring instruments and auxiliary items required**
- V.A.G 1331 Torque wrench (5 - 50 Nm)

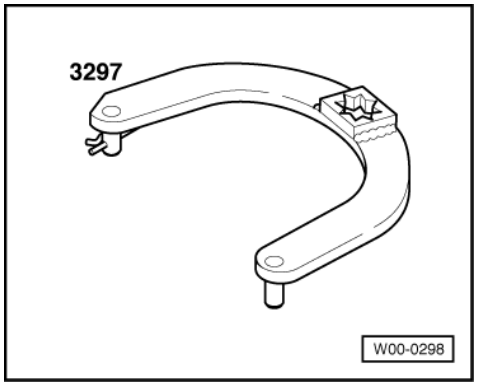


Protected by copyright. Copying for private or commercial purposes, in part or in whole, is not permitted unless authorised by Volkswagen AG. Volkswagen AG does not guarantee or accept any liability with respect to the correctness of information in this document. Copyright by Volkswagen AG.
satelettronica

- 3297 Tensioning lever

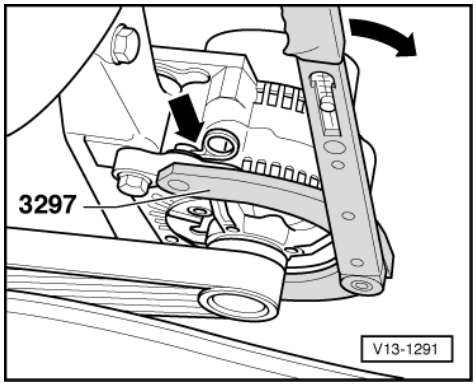


Removing ribbed belt

- Mark direction of rotation of ribbed belt if it is to be reused.
- Loosen alternator securing bolts at least one turn.
- -> Install tensioning lever 3297, secure with spring pin -arrow- and swivel alternator down (e.g. use torque wrench V.A.G 1331 to turn 3297).
- Remove ribbed belt.

Installing ribbed belt

*Note:*

- When installing used ribbed belts observe the direction of rotation marked on removal!
- When fitting the belt ensure the ribbed belt locates correctly in the pulleys!

- Fit ribbed belt onto crankshaft/vibration damper pulley. Alternator belt pulley remains free
- Lower alternator with lever 3297 and place ribbed belt on alternator pulley.
- Push alternator down at least 3 times onto stop with tensioning lever 3297 to ensure the alternator moves freely.
- After fitting ribbed belt with alternator loose rotate engine several times (approx. 10 revolutions of engine), to do this operate starter briefly, but do not start engine.

*Note:*

*When tightening keep to the sequence given, do not use the alternator for support and do not touch ribbed belt.*

- Tighten alternator lower securing bolt first and then upper securing bolt to 25 Nm.
- Start engine and check belt running.

4-cyl. injection engine with P.A.S vane pump and air conditioner compressor

Removing ribbed belt

- Remove ribbed belt cover.
- Mark direction of rotation of ribbed belt if it is to be reused.

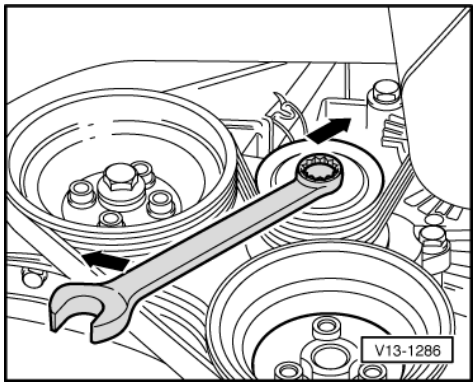


Protected by copyright. Copyright by Volkswagen AG. Volkswagen AG does not guarantee or accept any liability with respect to the correctness of information in this document. Copying for private or commercial purposes, in part or in whole, is not permitted unless authorised by Volkswagen AG.
satelettronica

- -> Using a spanner on the securing bolt swivel tensioning roller in direction of arrow.
- Remove ribbed belt.

### Installing ribbed belt

*Notes:*

- When installing used ribbed belts observe the direction of rotation marked on removal!
- Ensure, before installing ribbed belt, that all ancillaries (alternator, air conditioner compressor, PAS vane pump) are secured tightly.

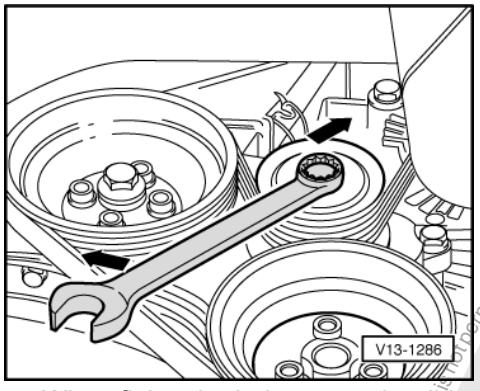


- When fitting the belt ensure the ribbed belt locates correctly in the pulleys!

- -> Using a spanner on the securing bolt swivel tensioning roller in direction of arrow.
- Place ribbed belt onto crankshaft/vibration damper pulley first. Fit belt onto tensioning roller last.
- Start engine and check belt running.

### 4-cylinder diesel engine

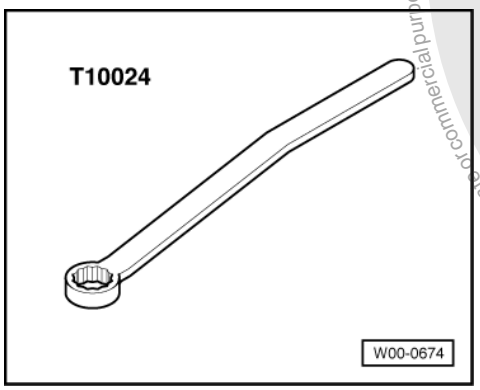


### Special tools, testers, measuring instruments and auxiliary items required

- T10024 Ring spanner, 15 mm

### Removing ribbed belt

- Remove noise insulation tray.

Protected by copyright. Copying for private or commercial purposes, in part or in whole, is not permitted unless authorised by Volkswagen AG. Volkswagen AG does not guarantee or accept any liability with respect to the correctness of information in this document. Copyright by Volkswagen AG.
satelettronica

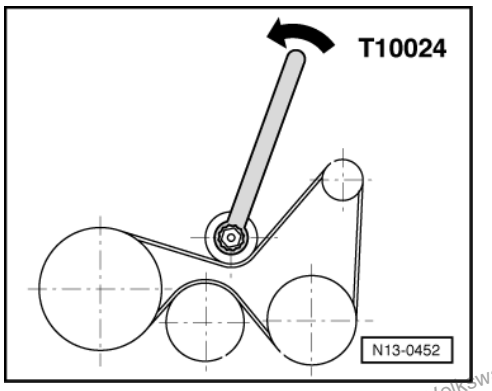


=> General body repairs, exterior; Repair group 50; Body front; Assembly overview Body front Assembly overview

- Mark direction of rotation of ribbed belt if it is to be reused.
- -> Swing tensioning roller on tensioning lever in direction of arrow.
- Remove ribbed belt.

Installing ribbed belt

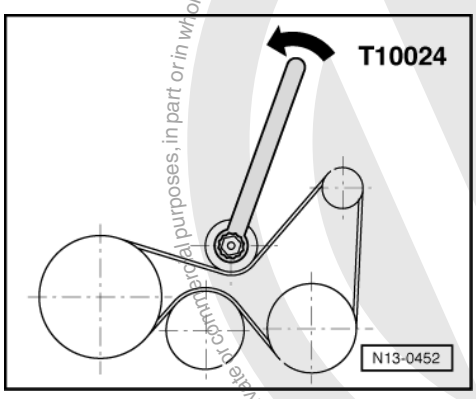


*Note:*

- When installing used ribbed belts observe the direction of rotation marked on removal!
- When fitting the belt ensure the ribbed belt locates correctly in the pulleys!

- -> Swing tensioning roller on tensioning lever in direction of arrow.
- Fit ribbed belt.
- Start engine and check belt running.

- Install sound insulation tray.

3-cylinder diesel engine

Removing ribbed belt

- Remove noise insulation tray.

=> General body repairs, exterior; Repair group 50; Body front; Assembly overview Body front Assembly overview

- Mark direction of rotation of ribbed belt if it is to be reused.

Copyright by Volkswagen AG. Volkswagen AG does not guarantee or accept any liability with respect to the correctness of information in this document. Copyright by Volkswagen AG. Protected by copyright. Copying for private or commercial purposes, in part or in whole, not permitted unless authorised by Volkswagen AG.
satelettronica

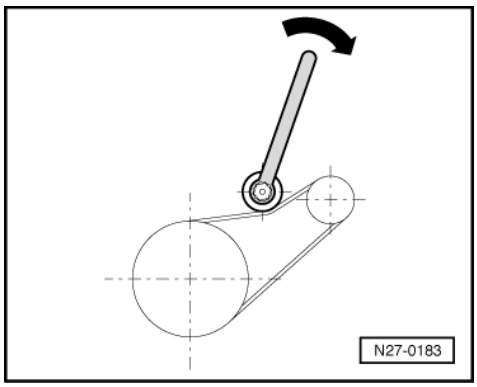


- -> Swing tensioning roller on tensioning lever in direction of arrow.
- Remove ribbed belt.

Installing ribbed belt

*Note:*

- When installing used ribbed belts observe the direction of rotation marked on removal!

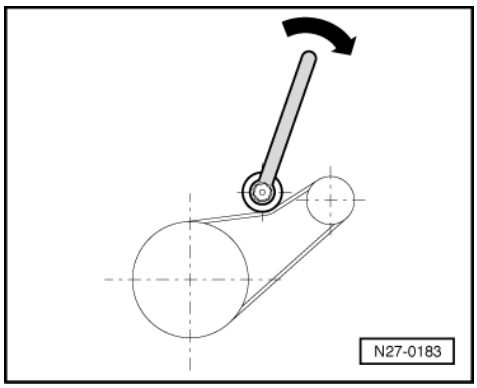


- When fitting the belt ensure the ribbed belt locates correctly in the pulleys!

- -> Swing tensioning roller on tensioning lever in direction of arrow.
- Fit ribbed belt.
- Start engine and check belt running.
- Install sound insulation tray.

## 3.15 - Compact alternator with ribbed belt drive, vehicles >04.99

Securing B+ wire to alternator

*Notes:*

*If the B+ wire is not secured with the prescribed tightening torque the following may occur:*

- Battery not charged completely.
- Vehicle electrics/electronics fail completely (breakdown).
- Danger of fires from sparks.
- Damage to electronic components and control units due to excessive voltages.

Protected by copyright. Copyright for private, commercial purposes, in part or in whole, is not permitted unless authorised by Volkswagen AG. Volkswagen AG does not guarantee or accept any liability with respect to the correctness of information in this document. Copyright by Volkswagen AG.
satelettronica

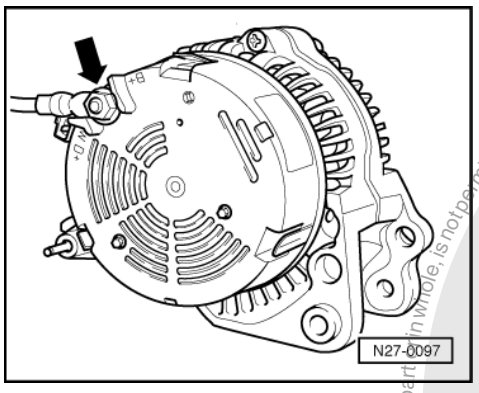


-> The tightening torque for the B+ wire -arrow- securing nut is 15 Nm.

## 3.16 - Checking alternator carbon brushes, vehicles >04.99

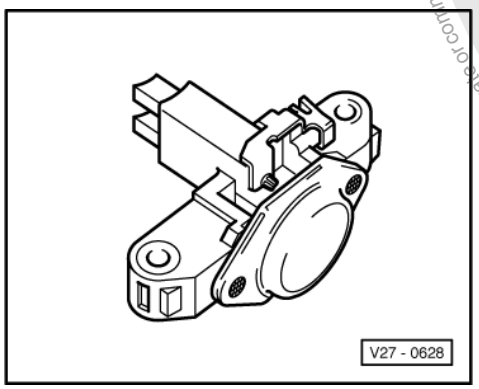


-> Length of new carbon brushes = 12mm

Wear limit = 5mm

Carbon brush tolerance to one another = 1mm

## 3.17 - Removing and installing voltage regulator for alternator, vehicles > 04.99

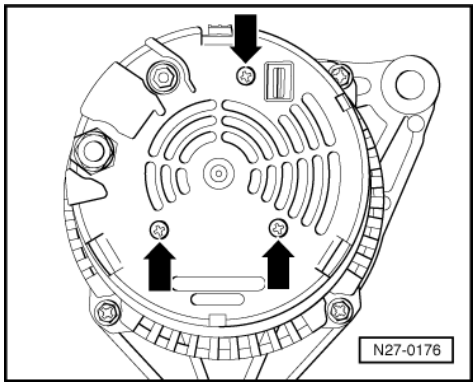


- -> Remove screws -arrows- securing protective cap and pull protective cap off.
- Remove screws securing voltage regulator and take voltage regulator out.

Installation is carried out in the reverse sequence.

Volkswagen AG does not guarantee or accept any liability with respect to the correctness of information in this document. Copyright by Volkswagen AG.
Protected by copyright. Copying for private or commercial purposes, in part or in whole, is not permitted unless authorised by Volkswagen AG.
satelettronica

## 3.18 - Compact alternator with ribbed belt drive, vehicles 05.99 >

From 05.99 compact alternators with a revised form and terminal designation were introduced.

External means of identifying the new compact alternator as opposed to the compact alternators are:

- Revised voltage regulator
- Oval radially sealed connection for the 2-pin connector instead of the angular 2-pin connection used previously
- Revised terminal designations for the connections

=> Current flow diagrams, Electrical fault finding and Fitting locations.

**Securing B+ wire to alternator**

***Notes:***

*The threaded connection for the + wire on the compact alternator is designated B1+!*

*If the B1+ wire is not secured with the prescribed tightening torque the following may occur:*

- Battery not charged completely.
- Vehicle electrics/electronics fail completely (breakdown).

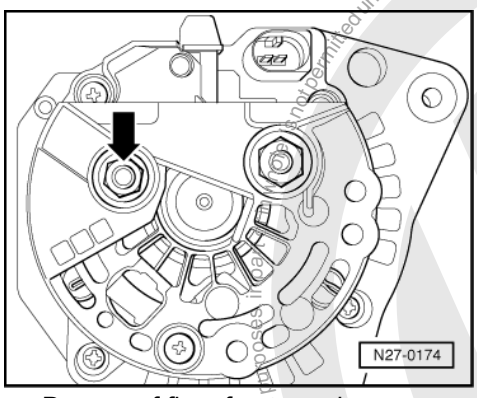


- Danger of fires from sparks.
- Damage to electronic components and control units due to excessive voltages.

-> The tightening torque for the B1+ wire -arrow- securing nut is 15 Nm.

## 3.19 - Checking alternator carbon brushes, vehicles 05.99 >

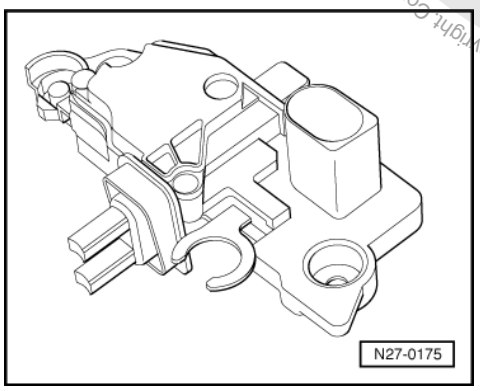


Protected by copyright. Copyright by Volkswagen AG.
Volkswagen AG. Volkswagen AG does not guarantee or accept any liability with respect to the correctness of information in this document.
satelettronica

-> Length of new carbon brushes = 12mm

Wear limit = 5mm

Carbon brush tolerance to one another = 1mm

## 3.20 - Removing and installing voltage regulator for alternator, vehicles 05.99 >

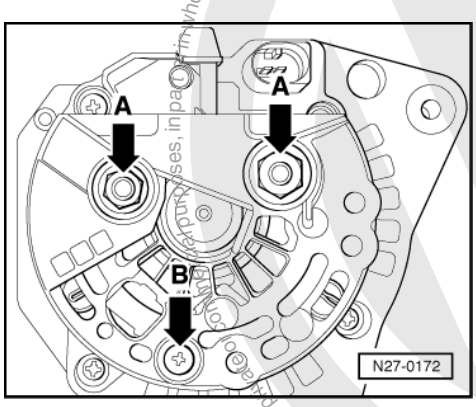


- -> Remove securing nuts -arrow A- and securing screw -arrow B- for protective cap and take protective cap off.

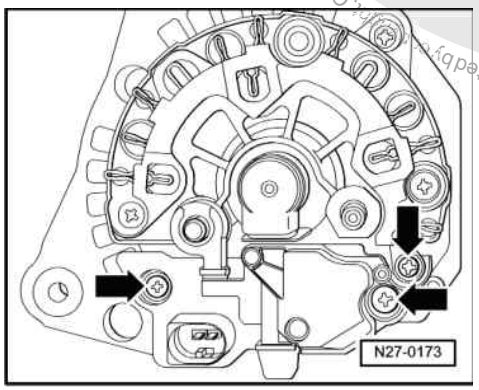


- -> Remove screws -arrows- securing voltage regulator and take voltage regulator out.

Installation is carried out in the reverse sequence.

## 3.21 - Replacing alternator ribbed belt pulley

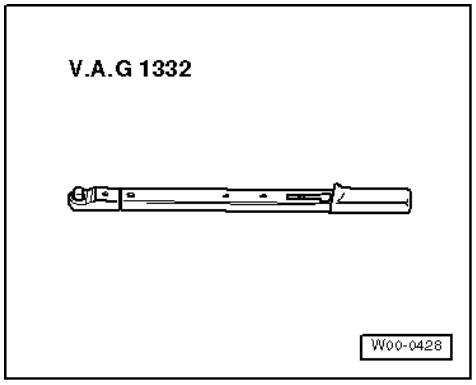


satelettronica

Special tools, testers, measuring instruments and auxiliary items required

- V.A.G 1332 Torque wrench (40 - 200 Nm)

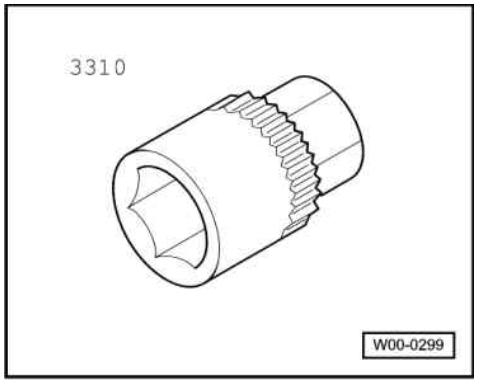


- 3310 Socket

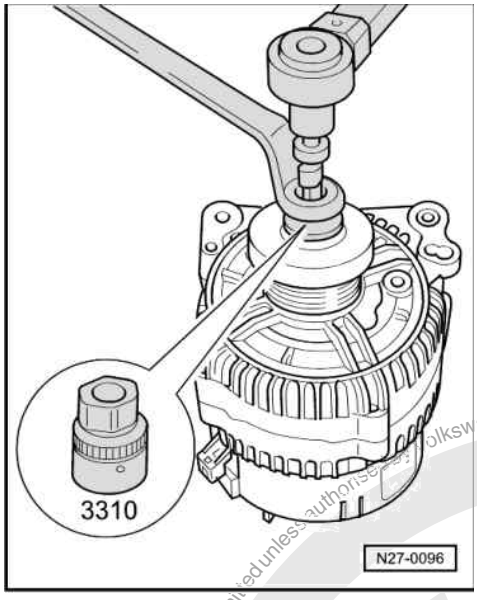


Removing and installing ribbed belt pulley on alternator

-> The special tool -socket 3310- is required to loosen/tighten the ribbed belt pulley on alternator.

The ribbed belt pulley securing nut tightening torque is 65 Nm.

## 3.22 - Removing and installing ribbed belt pulley with freewheel

*Note:*

*Freewheel disc can be retrofitted in vehicles with a Bosch alternator ‣ 04.99.*

*Freewheel disc can not be retrofitted in vehicles with a Valeo alternator ‣ 04.99.*

*Valeo alternators must be renewed complete for a Bosch alternator.*

*The ribbed belt pulley with freewheel is the same for all alternators (various manufacturers), fitted in vehicles 05.99 ‣*

Protected by copyright. Copying for private or commercial purposes, in part or in whole, is not permitted unless authorised by Volkswagen AG. Volkswagen AG does not guarantee or accept any liability with respect to the correctness of information in this document. Copyright by Volkswagen AG.
satelettronica

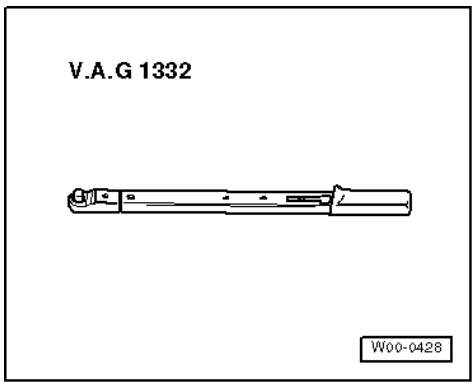


Installing ribbed ribbed belt pulley with freewheel

Special tools, testers, measuring instruments and auxiliary items required

- V.A.G 1332 Torque wrench (40 - 200 Nm)

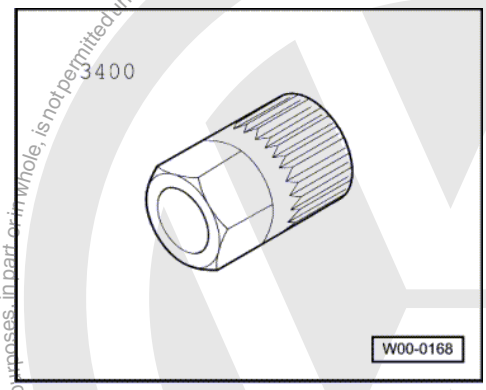


- 3400 Multi-spline adapter

- First remove existing ribbed belt pulley => Page 59 .
- Insert multi-spline adapter 3400 in freewheel disc.

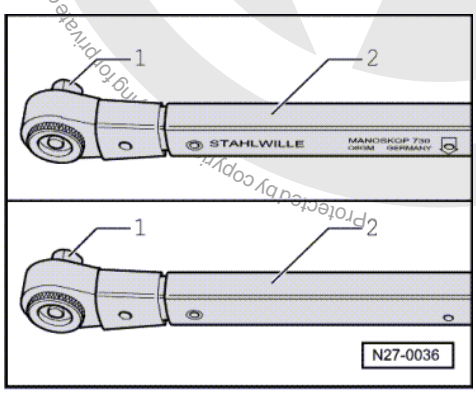


- Screw freewheel disc by hand onto alternator drive shaft onto stop.

The torque wrench must be rearranged before installing the freewheel disc as follows:

- -> Release socket drive -1- and pull off grip -2-.
- Turn torque wrench grip -2- through 180°and reinsert socket drive.

Volkswagen AG. Volkswagen AG does not guarantee or accept any liability with respect to the correctness of information in this document. Copyright by Volkswagen AG. Protected by copyright. Reproduction for commercial purposes, in part or in whole, is not permitted unless authorised.
satelettronica

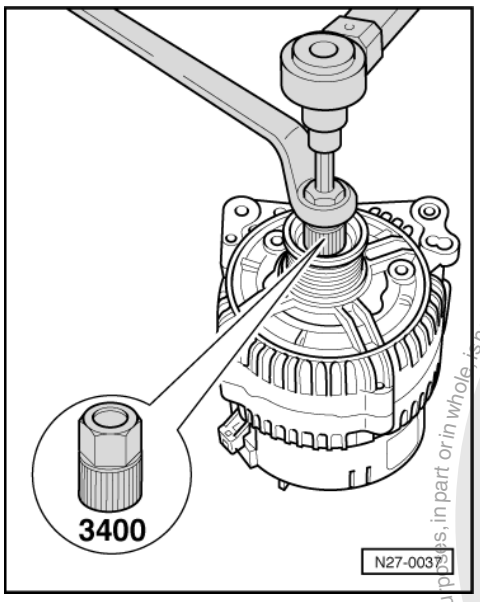


- Set wrench direction of turn on socket drive to anti-clockwise.
- Set torque wrench tightening torque to 80 Nm.
- Fit 6 mm AF socket onto alternator drive shaft.
- -> Counter-hold multi point key 3400 with 17 mm AF ring spanner and tighten freewheel disc to 80 Nm by turning alternator drive shaft anti-clockwise with torque wrench.
- Clip protective cap onto freewheel disc.

Protected by copyright. Copying for private or commercial purposes, in part or in whole, is not permitted unless authorised by Volkswagen AG. Volkswagen AG does not guarantee or accept any liability with respect to the correctness of information in this document. Copyright by Volkswagen AG.
satelettronica

# 90 - Gauges, Instruments

## 1 - Dash panel insert for vehicles > 1997

### 1.1 - Dash panel insert for vehicles > 1997

### 1.2 - Removing and installing dash panel insert

Warning!
Before working on the electrical system disconnect the battery earth strap.

*Notes:*

- When the battery is reconnected, check operation of electrical equipment (radio, clock and electric window lifters) according to Workshop Manual or Owner's Manual.

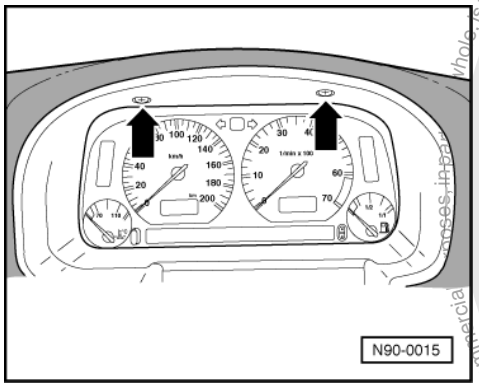


- It is not necessary to remove the steering wheel. In the following illustrations the steering wheel, for clarity, is not shown.

- -> Remove securing screws at top -arrows-.
- The plastic trim can then be pulled out.

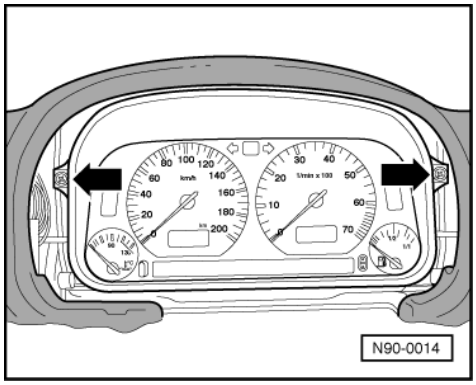


- -> Remove both securing screws left and right -arrows-.
- Tip dash panel insert forwards.
- Disconnect multi-pin connector on rear of dash panel insert.
- Remove dash panel insert.

Protected by copyright. Copying for private or commercial purposes, in part or in whole, is not permitted unless authorised by Volkswagen AG. Volkswagen AG does not guarantee or accept any liability with respect to the correctness of information in this document. Copyright by Volkswagen AG.
satelettronica

Installing dash panel insert

Install in reverse order.

## 1.3 - Renewing bulbs in dash panel insert (VDO)

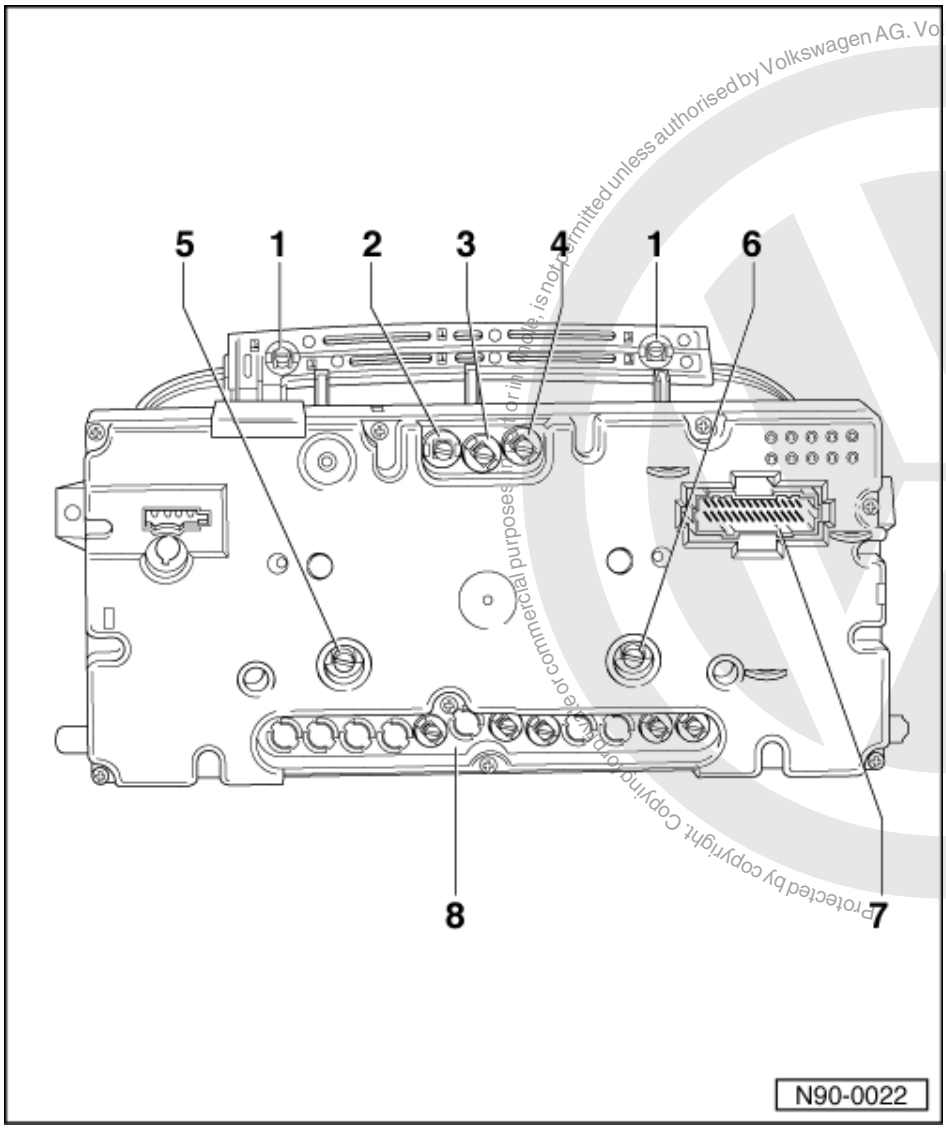


Protected by copyright. Copying or distribution, in whole or in part, is not permitted unless authorised by Volkswagen AG. Volkswagen AG does not guarantee or accept any liability with respect to the correctness of information in this document. Copyright by Volkswagen AG.
satelettronica

*Notes:*

- The dash panel insert must not be dismantled.
- Information on checking voltages and bulbs with test box V.A.G. 1598 =>Page 72 .
- Fault finding programmes for specific systems and current circuits

=> Current flow diagrams, Electrical fault finding and Fitting locations

1 Bulb with holder (bulb for dash panel illumination L10)
- 12 V / 1.2 W

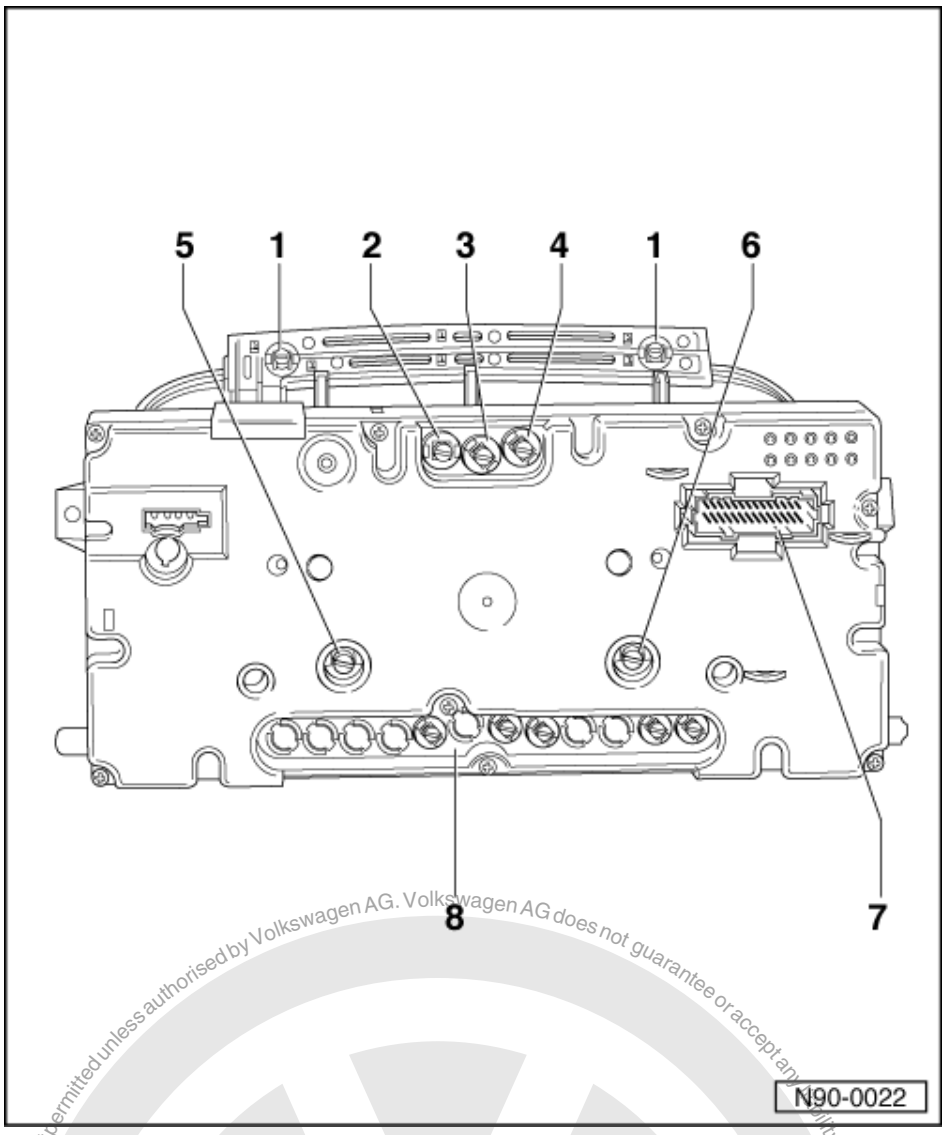


2 Bulb with holder (right turn signal warning lamp K94)
- 12 V / 1.1 W

3 Bulb with holder (main beam warning lamp K1)
- 12 V / 1.1 W

4 Bulb with holder (left turn signal warning lamp K65)
- 12 V / 1.1 W

5 Bulb with holder (bulb for digital clock illumination)
- 12 V / 1.1 W

Protected by copyright. Copying for private or commercial purposes, in part or in whole, is not permitted unless authorised by Volkswagen AG. Volkswagen AG does not guarantee or accept any liability with respect to the correctness of information in this document. Copyright by Volkswagen AG.
satelettronica

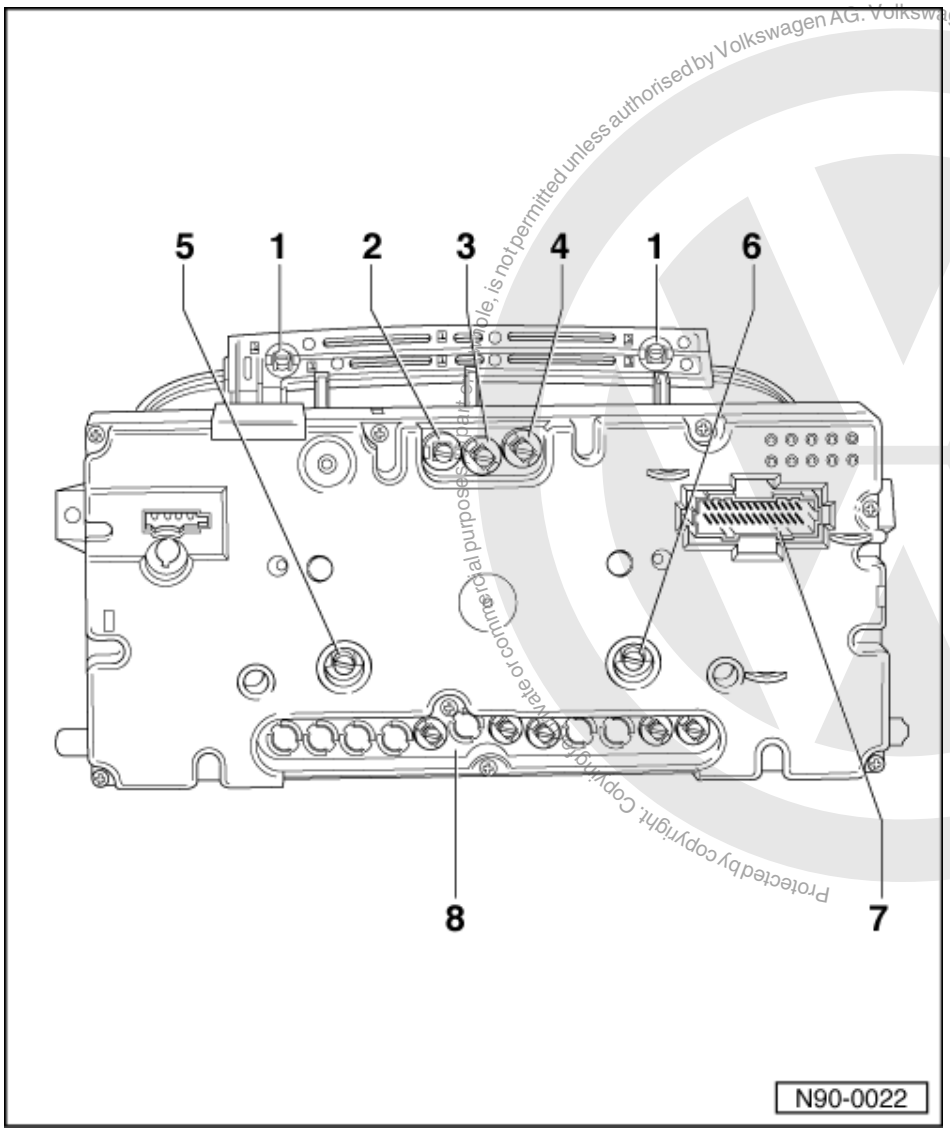


Protected by copyright. Copying for private or commercial purposes, in any form and by any means, is not permitted unless authorised by Volkswagen AG. Volkswagen AG does not guarantee or accept any liability with respect to the correctness of information in this document. Copyright by Volkswagen AG.

satelettronica

6 Bulb with holder (bulb for odometer illumination)
- 12 V / 1.1 W

7 Multi-pin connector on dash panel insert
- Connector contact assignment
  => Page 71

8 Bulb with holder (various warning lamps depending upon level of vehicle equipment)
- 12 V / 1.1 W

## 1.4 - Renewing bulbs in dash panel insert (MOTOMETER)

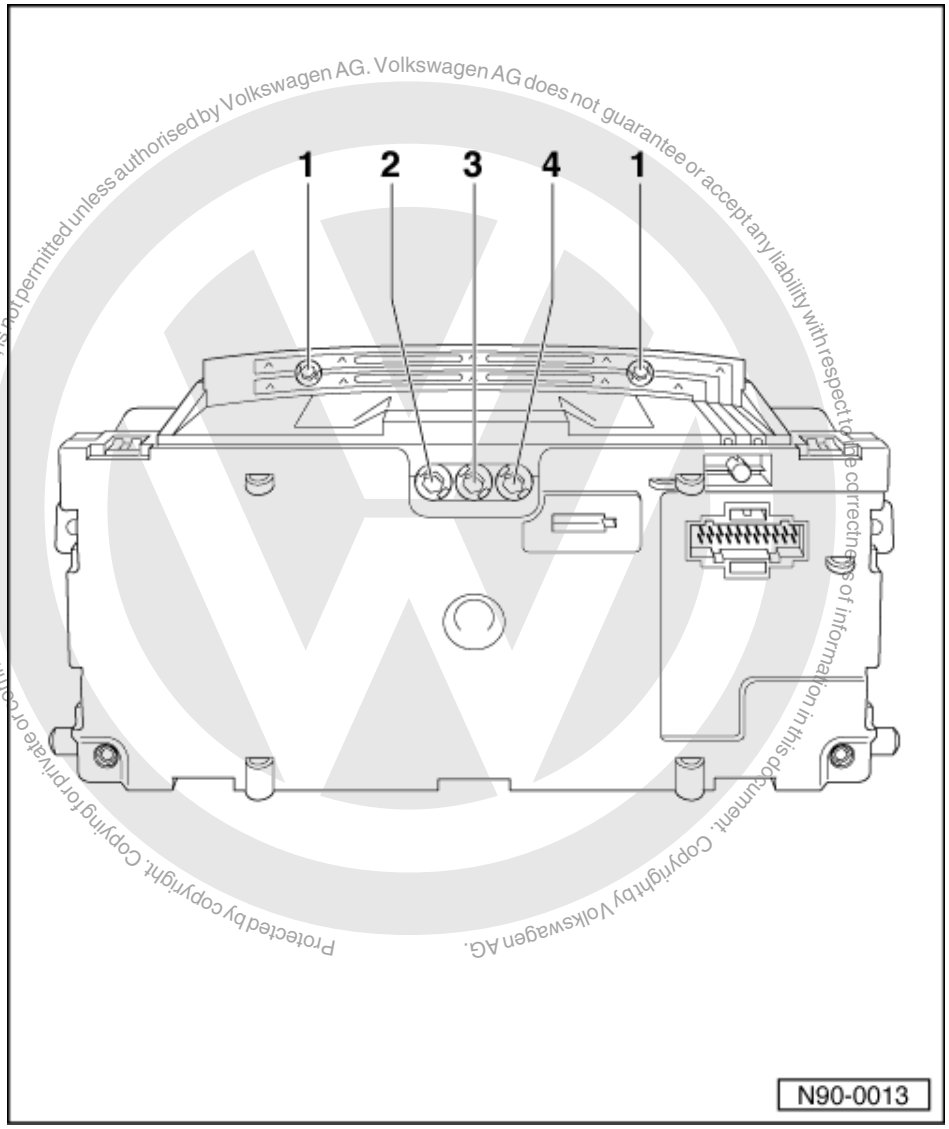


Protected by copyright. Copying for private or commercial purposes, in part or in whole, is not permitted unless authorised by Volkswagen AG. Volkswagen AG does not guarantee or accept any liability with respect to the correctness of information in this document. Copyright by Volkswagen AG.

satelettronica

*Notes:*

- The dash panel insert must not be dismantled.
- Information on checking voltages and bulbs with test box V.A.G. 1598 =>Page 72 .
- Fault finding programmes for specific systems and current circuits

=> Current flow diagrams, Electrical fault finding and Fitting locations

1 **Bulb with holder (bulb for dash panel illumination L10)**
- 12 V / 1.2 W

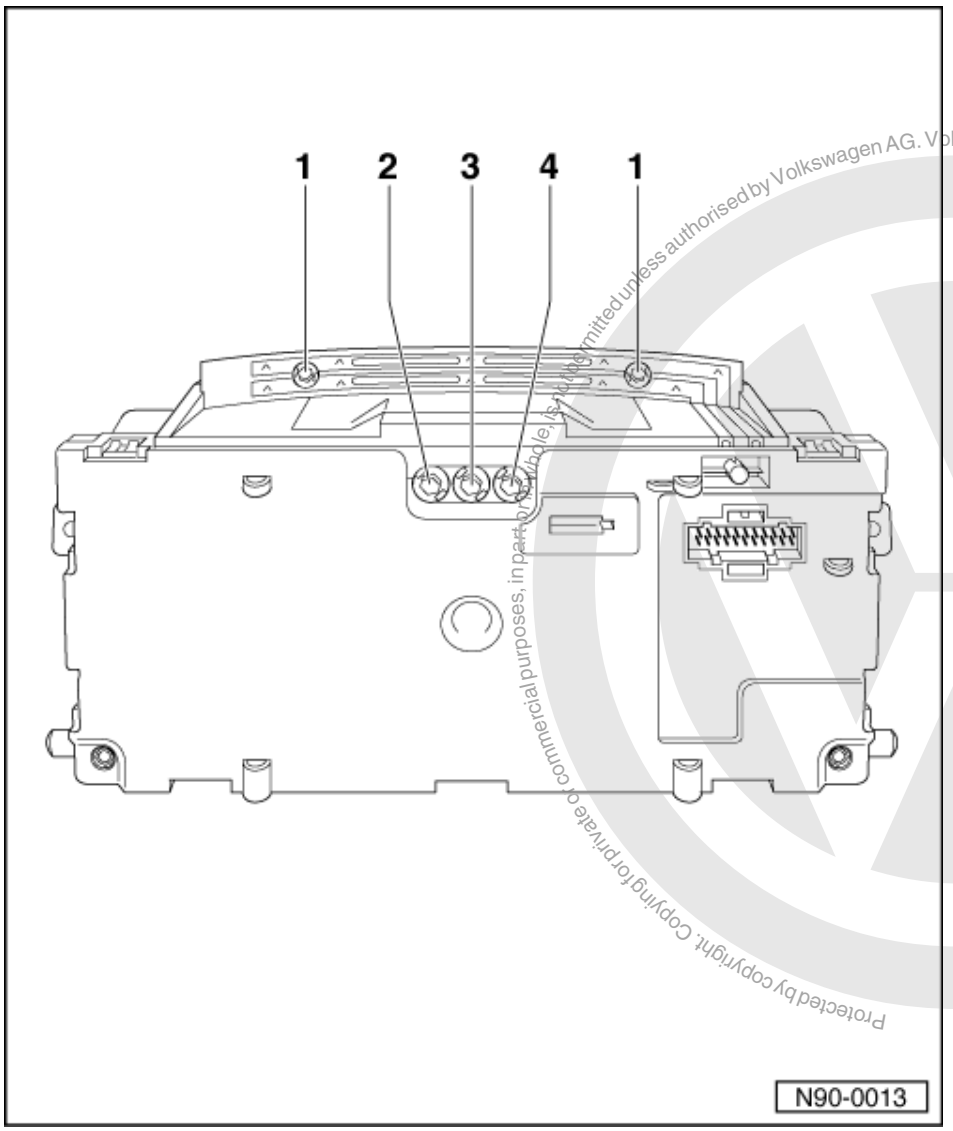


2 Bulb with holder (right turn signal warning lamp K94)
- 12 V / 1.1 W

3 Bulb with holder (main beam warning lamp K1)
- 12 V / 1.1 W

4 Bulb with holder (left turn signal warning lamp K65)
- 12 V / 1.1 W

Protected by copyright. Copying for private or commercial purposes, in part or in whole, is not permitted unless authorised by Volkswagen AG. Volkswagen AG does not guarantee or accept any liability with respect to the correctness of information in this document. Copyright by Volkswagen AG.
satelettronica

## 1.5 - Dash panel insert (MOTOMETER) warning lamp symbols

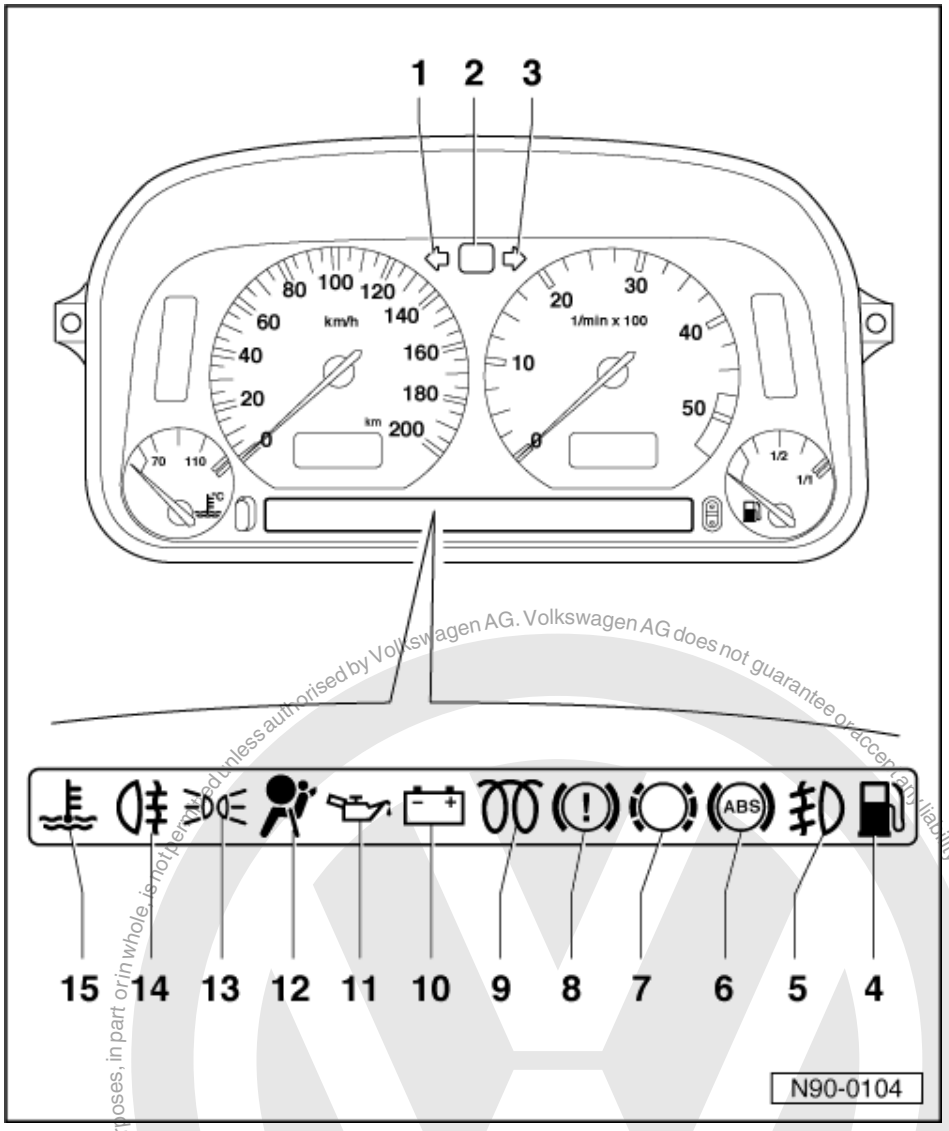


*Note:*

*If due to incorrect connection a warning lamp for equipment not fitted to the vehicle lights up, it can be corrected with the help with the following information.*

1 Turn signal, left
2 Main beam
3 Turn signal, right
4 Fuel reserve indicator (not connected)
5 Fog lights (not connected)

Protected by copyright. Copying for private or commercial purposes, in part or in whole, is not permitted unless authorised by Volkswagen AG. Volkswagen AG does not guarantee or accept any liability with respect to the correctness of information in this document. Copyright by Volkswagen AG.
satelettronica

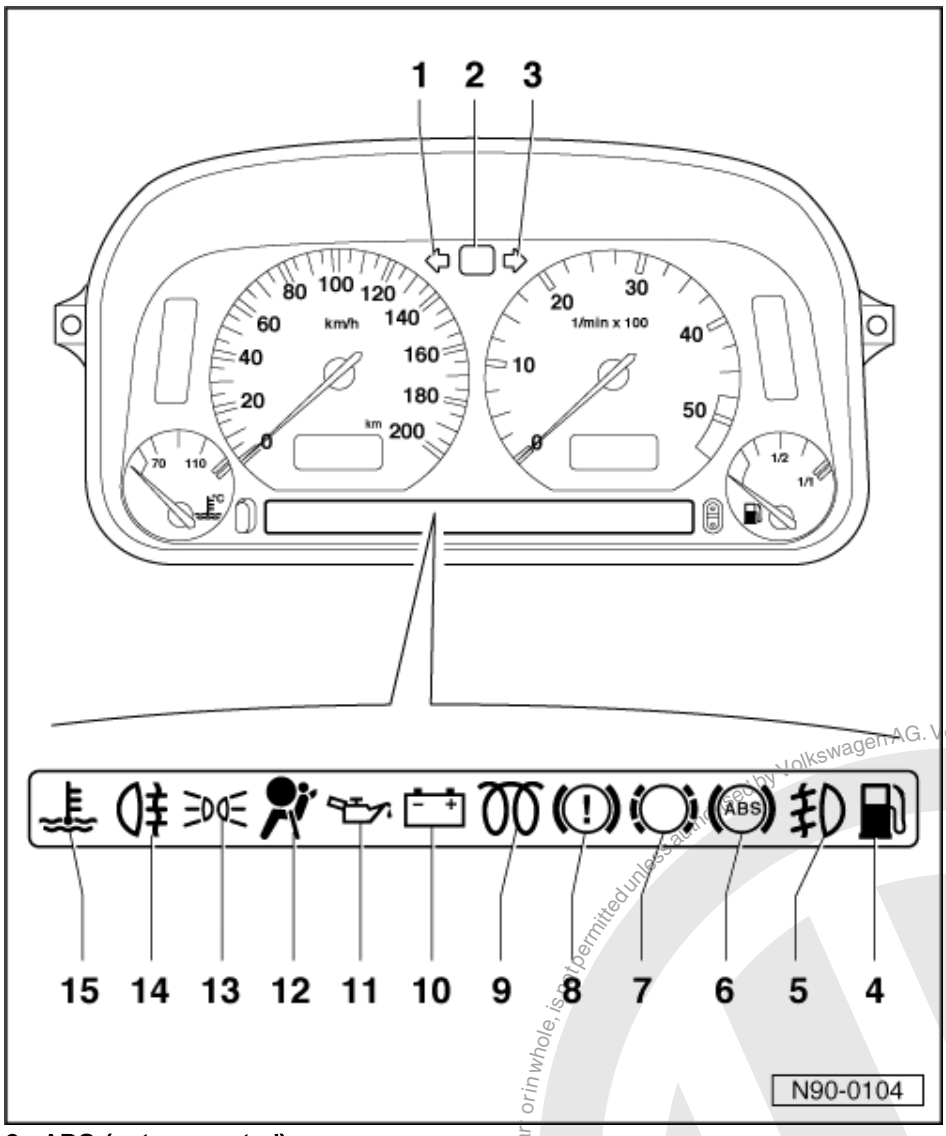


6 ABS (not connected)
7 Brake pad wear warning lamp (not connected)
8 Brake warning lamp (not connected)
9 Glow period warning lamp
10 Alternator
11 Oil pressure
12 Airbag (not connected)
13 Side mounted turn signals/side light warning lamp (not connected)
14 Rear fog lights
15 Coolant

Protected by copyright. Copying for private or commercial purposes, in part or in whole, is not permitted unless authorised by Volkswagen AG. Volkswagen AG does not guarantee or accept any liability with respect to the correctness of information in this document. Copyright by Volkswagen AG.
satelettronica

## 1.6 - Connector contact assignment on dash panel insert

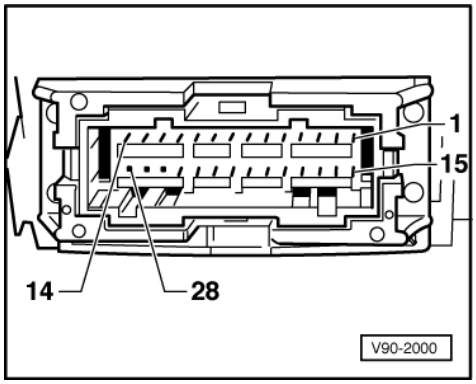


1 - Vacant
2 - Coolant shortage indicator
3 - Terminal 31, earth
4 - Vacant
5 - Terminal 31, electronic earth
6 - MFI memory switch (Memory) *
7 - Hall/inductive sender output
8 - Oil pressure switch 1.8 bar
9 - Oil pressure switch 0.3 bar
10 - Terminal 1 / Terminal W
11 - Terminal 30, battery positive, clock
12 - Terminal 58b, dash panel insert lighting
13 - Terminal 15, general
14 - Belt

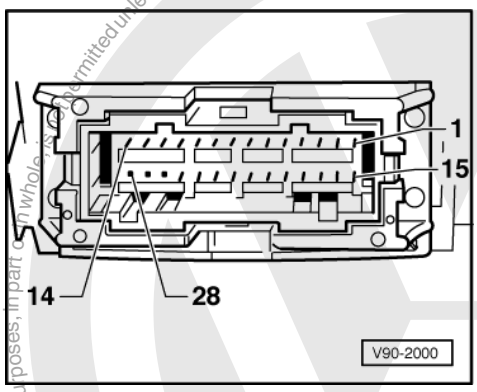


15 - Vacant
16 - Alternator warning lamp, terminal 61
17 - Vacant
18 - Dual circuit brake and handbrake system warning lamp
19 - Ambient temperature sensor, signal *
20 - Glow period warning lamp / CAT / Check / Choke
21 - Fuel gauge
22 - Left turn signal warning lamp
23 - Coolant temperature gauge
24 - Right turn signal warning lamp
25 - Main beam warning lamp
26 - Vacant
27 - Speed signal from speedometer sender (G22), E.-speedometer input
28 - Rear fog light

satelettronica

## 1.7 - Checking voltages and bulbs with test box V.A.G. 1598

*Notes:*

- For checking use hand multimeter V.A.G. 1526, test lamp V.A.G. 1527 and test box V.A.G. 1598 with adapter cable V.A.G. 1598/8.
- Dash panel insert fault finding programme

=> Current flow diagrams, Electrical fault finding and Fitting locations

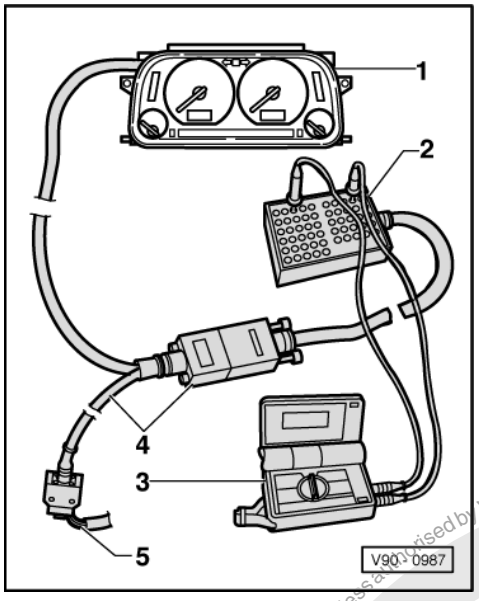


- Remove dash panel insert => Page 63 .
- Disconnect multi-pin connector on rear of dash panel insert.
- -> Connect test box V.A.G. 1598 with adapter cable V.A.G. 1598/8 to dash panel insert and disconnected wiring loom (connectors must engage audibly).

1 - Dash panel insert
2 - Test box V.A.G. 1598 with connecting cable
3 - Hand multimeter V.A.G. 1526
4 - Adapter cable V.A.G. 1598/8
5 - Dash panel insert wiring loom

**Test prerequisites:**

*Battery voltage OK.*
*Affected fuse OK. (see current flow diagram)*
*Hand multimeter set to voltage measurement -V-.*

*Notes:*

- For deviations from specifications, check wiring loom according to current flow diagram.
- If the specifications are attained in test steps 1 and 2, the dash panel insert must be replaced.
- If the specifications are attained in test steps 3 to 9, the corresponding bulb must be checked. Only when the bulb is OK. must the dash panel insert be exchanged.

| Test step | V.A.G. 1598 socket | Voltage supply is checked | Test conditions and additional work | Specifications |
|---|---|---|---|---|
| 1 | 11 + 3 | Terminal 30/Terminal 31 | Ignition switched off | approx. battery voltage |
| 2 | 13 + 3 | Terminal 15/Terminal 31 | Ignition switched on | approx. battery voltage |

Protected by copyright. Copyright by Volkswagen AG. Volkswagen AG does not guarantee or accept any liability with respect to the correctness of information in this document. Copyright by Volkswagen AG. Protected by copyright. Copyright by Volkswagen AG. Volkswagen AG does not guarantee or accept any liability with respect to the correctness of information in this document. Copyright by Volkswagen AG. Protected by copyright. Copyright by Volkswagen AG. Volkswagen AG does not guarantee or accept any liability with respect to the correctness of information in this document. Copyright by Volkswagen AG.
satelettronica

| | | | | |
|---|---|---|---|---|
| 31) | 22 + 3 | Left turn signal warning lamp | Ignition switched on<br>Connect test lamp<br>Switch on left turn signal | Test lamp flashes |
| 41) | 24 + 3 | Right turn signal warning lamp | Ignition switched on<br>Connect test lamp<br>Switch on right turn signal | Test lamp flashes |

1) Use test lamp V.A.G. 1527

| Test step | V.A.G. 1598 socket | Voltage supply is checked | Test conditions and additional work | Specifications |
|---|---|---|---|---|
| 5 | 12 + 3 | Bulbs for dash panel insert, digital clock, MFI and odometer illumination | Ignition switched on<br>Switch on lights | approx. 2.5 V up to battery voltage, depending upon position of regulator E20 |
| 6 | 25 + 3 | Main beam warning lamp | Ignition switched on<br>Switch on main beams | approx. battery voltage |
| 7 | 18 + 3 | Dual circuit and handbrake system warning lamp | Ignition switched on<br>Apply handbrake<br>Release handbrake | approx. 0 V<br>approx. battery voltage |
| 8 | 16 + 3 | Alternator warning lamp | Ignition switched on<br>Start engine | approx. battery voltage |
| 92) | 13 + 20 | Glow period warning lamp | Engine cold (below glow plug temperature)<br>Switch on ignition | approx. battery voltage until glow period temperature is attained |

2) Diesel engine only and not with hot engine

# 2 - Dash panel insert for vehicles 1998 >

## 2.1 - Dash panel insert for vehicles 1998 >

## 2.2 - Removing and installing dash panel insert

The dash panel insert is equipped with self-diagnosis which makes fault finding easier.

Therefore before removing the dash panel insert, perform the following work:

- Interrogate fault memory with fault reader V.A.G 1551.

=> Electrical system self-diagnosis; Repair group 01; Dash panel insert self-diagnosis (vehicles 1998 ▸); Performing self-diagnosis Dash panel insert self-diagnosis (vehicles 1998 ▸) Performing self-diagnosis

- Read service interval display values and distance recorder with fault reader V.A.G 1551 and note the values.

=> Electrical system self-diagnosis; Repair group 01; Dash panel insert self-diagnosis (vehicles 1998 ▸); Adapting service interval data following replacement of dash panel insert Dash panel insert self-diagnosis (vehicles 1998 ▸) Adapting service interval data following replacement of dash panel insert

If the fault dictates that the dash panel insert requires replacement the noted figures can be entered in the new dash panel insert.

Protected by copyright. Copyright by Volkswagen AG. Volkswagen AG does not guarantee or accept any liability with respect to the correctness of information. Copy only for private, non-commercial purposes, in part or in whole, is not permitted unless authorised by Volkswagen AG.
satelettronica

Removing dash panel insert

Warning!
Before working on the electrical system disconnect the battery earth strap.

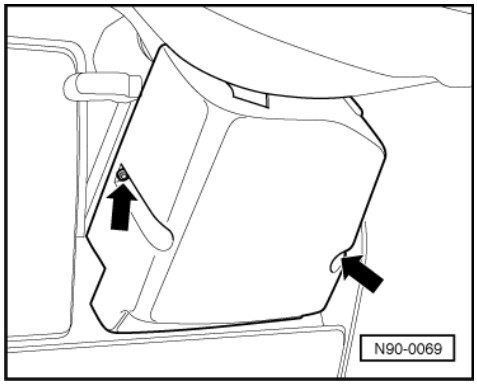


*Note:*

*When the battery is reconnected, check the vehicle equipment (radio, clock, electrical windows) as per Workshop Manual and/or the owner's manual.*

- -> Remove two cross-head screws -arrows- to remove the lower steering column trim.
- Take off lower steering column switch trim.

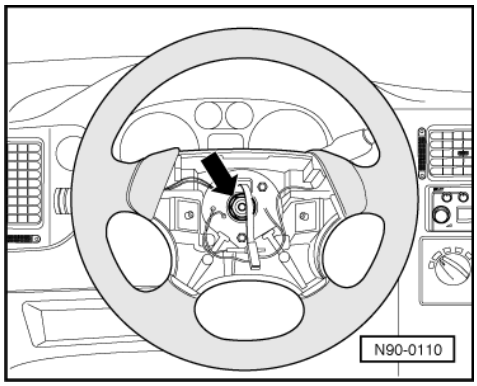


- Remove driver's airbag.

=> General body repairs; Repair group 69; Removing and installing airbag Removing and installing airbag

- -> Remove hexagon nut (50 Nm) -arrow-.
- Position steering wheel in central position (wheels straight ahead).

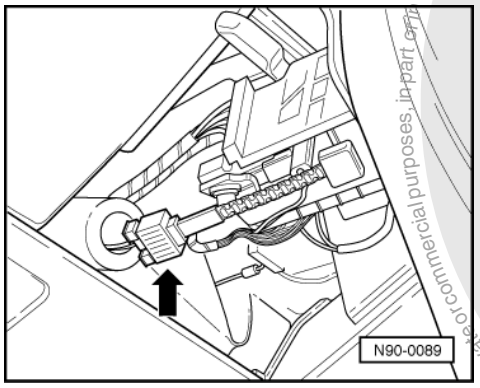


Protected by copyright. Copying for private or commercial purposes, in part or in whole, is not permitted unless authorised by Volkswagen AG. Volkswagen AG does not guarantee or accept any liability with respect to the correctness of information in this document. Copyright by Volkswagen AG.
satelettronica

- -> Slide back foam covering and disconnect connector -arrow- to coil spring for airbag.
- Pull steering wheel off steering column.
- Take off upper steering column switch trim.

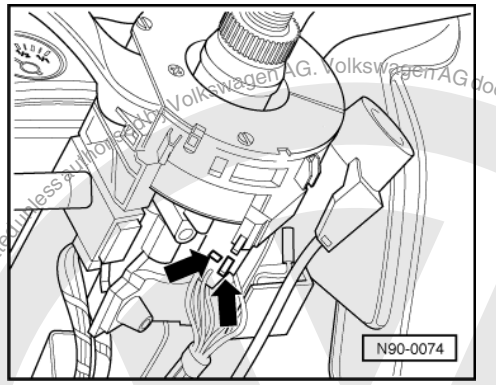


- -> Separate two connectors -arrows- to steering column switch for turn signal, main and dipped beams.

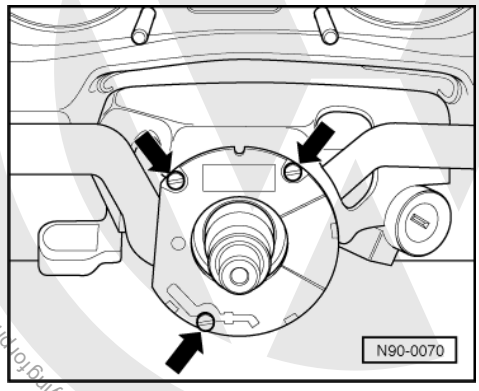


- -> Remove securing screws -arrows-.
- Pull turn signal, main and dipped beam steering column switch off the steering column.
- Release steering wheel height adjustment, push steering column into lowest position and lock.

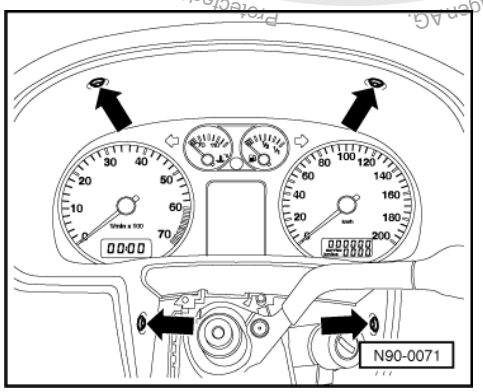


- -> Remove four screws -arrows-.

- Take out trim frame.

Volkswagen AG. Volkswagen AG does not guarantee or accept any liability with respect to the correctness of information in this document. Copyright by Volkswagen AG. Protected by copyright. Copying for private or commercial purposes, in part or in whole, is not permitted unless authorised by Volkswagen AG.
satelettronica

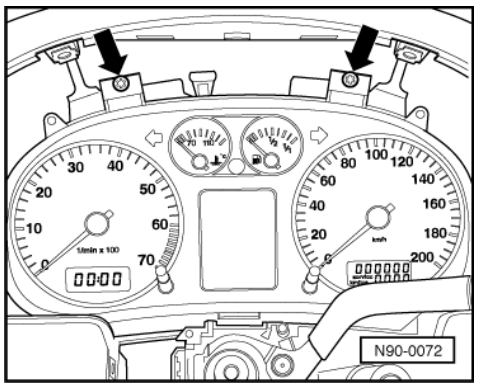


- -> Remove two screws -arrows-.
- Tilt dash panel forwards and unclip from lower pin mountings.
- Release connections and pull off dash panel.
- Take out dash panel insert.

**Installing dash panel insert**

Install in reverse order.

Protected by copyright. Copying for private or commercial purposes, in part or in whole, is not permitted unless authorised by Volkswagen AG. Volkswagen AG does not guarantee or accept any liability with respect to the correctness of information in this document. Copyright by Volkswagen AG.

satelettronica

## 2.3 - Dash panel insert, rear

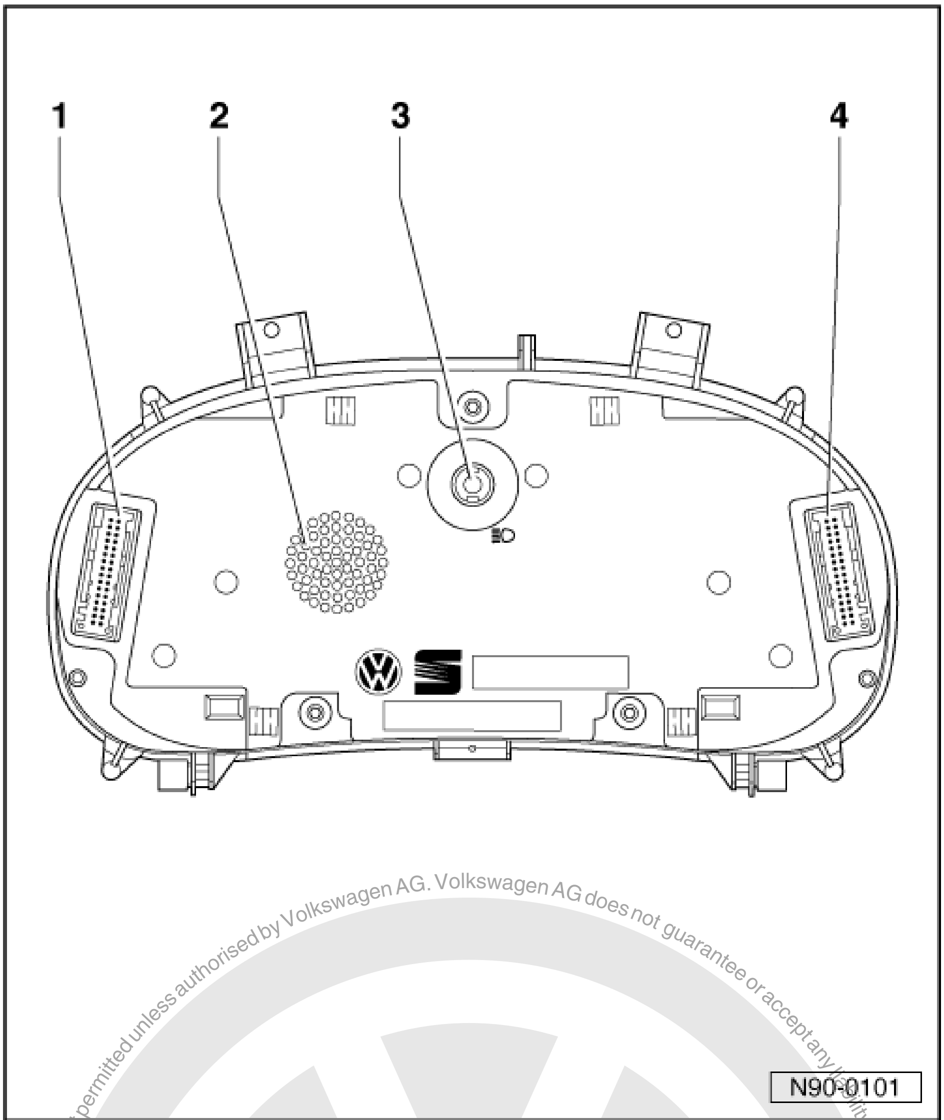


Dash panel insert (except Polo GTI)

*Notes:*

- The dash panel insert must not be dismantled.
- Fault finding programmes for specific systems and current circuits

=> Current flow diagrams, Electrical fault finding and fitting locations

1 32-pin connector T32
- Green
- Connector contact assignment => Page 85

2 Warning buzzer
- Oil pressure warning
- Lights switched on warning
- Seat belt warning (only certain countries)
- Speed warning (only certain countries)

Protected by copyright. Copying for private or commercial purposes, in part or in whole, is not permitted unless authorised by Volkswagen AG. Volkswagen AG does not guarantee or accept any liability with respect to the correctness of information in this document. Copyright by Volkswagen AG.
sateletronica

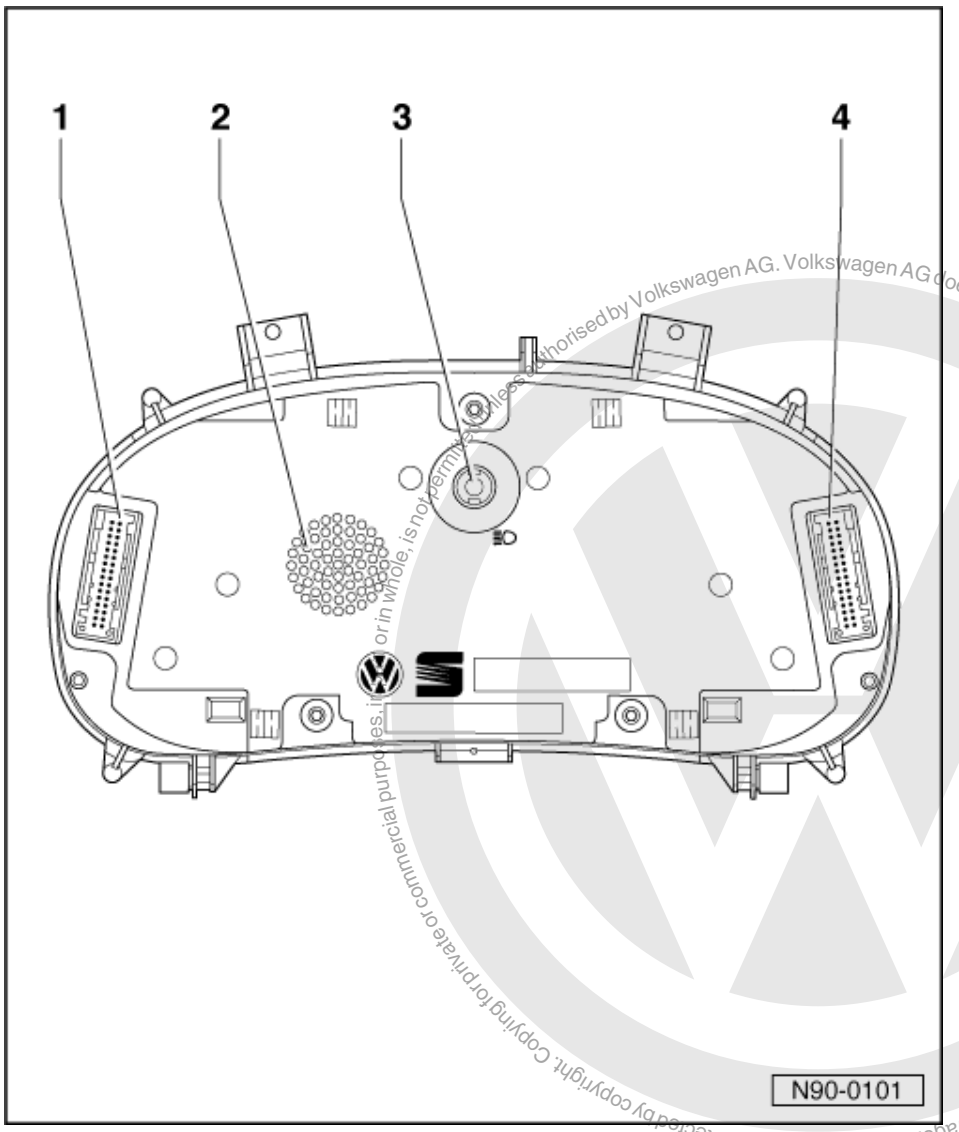


3 Bulb with holder (main beam warning lamp K1)
- 12 V / 1.12 W

4 32-pin connector T32a
- Blue
- Connector contact assignment
  => Page 83

Protected by copyright. Copying for private or commercial purposes, in whole or in part, is not permitted unless authorised by Volkswagen AG. Volkswagen AG does not guarantee or accept any liability with respect to the correctness of information in this document. Copyright by Volkswagen AG.
satelettronica

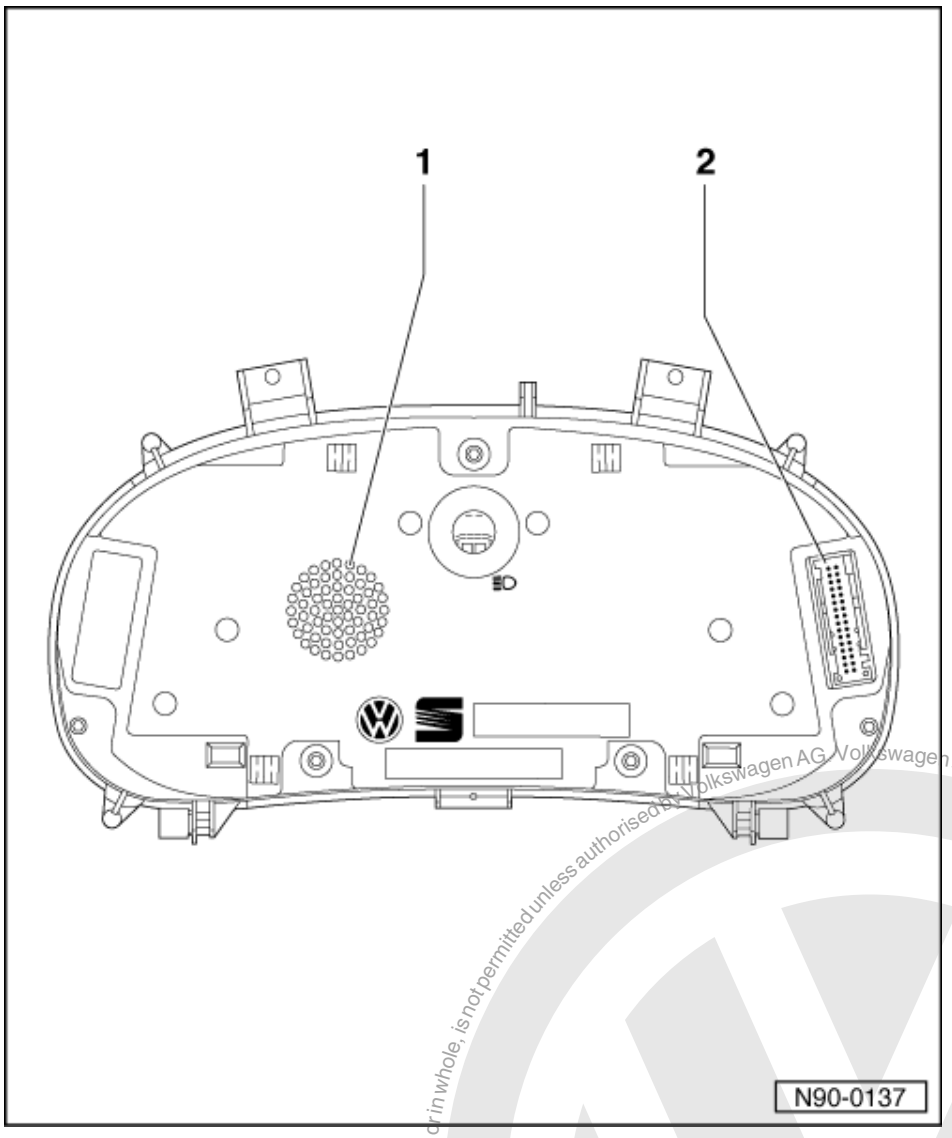


Dash panel insert Polo GTI

*Notes:*

- The dash panel insert must not be dismantled.
- Fault finding programmes for specific systems and current circuits

=> Current flow diagrams, Electrical fault finding and fitting locations

1 Warning buzzer
- Oil pressure warning
- Lights switched on warning
- Seat belt warning (only certain countries)
- Speed warning (only certain countries)

2 32-pin connector T32a
- Blue
- Connector contact assignment
  => Page 83

Protected by copyright. Copying for private or commercial purposes, in part or in whole, is not permitted unless authorised by Volkswagen AG. Volkswagen AG does not guarantee or accept any liability with respect to the correctness of information in this document. Copyright by Volkswagen AG.
satelettronica

## 2.4 - Warning lamp symbols in dash panel insert

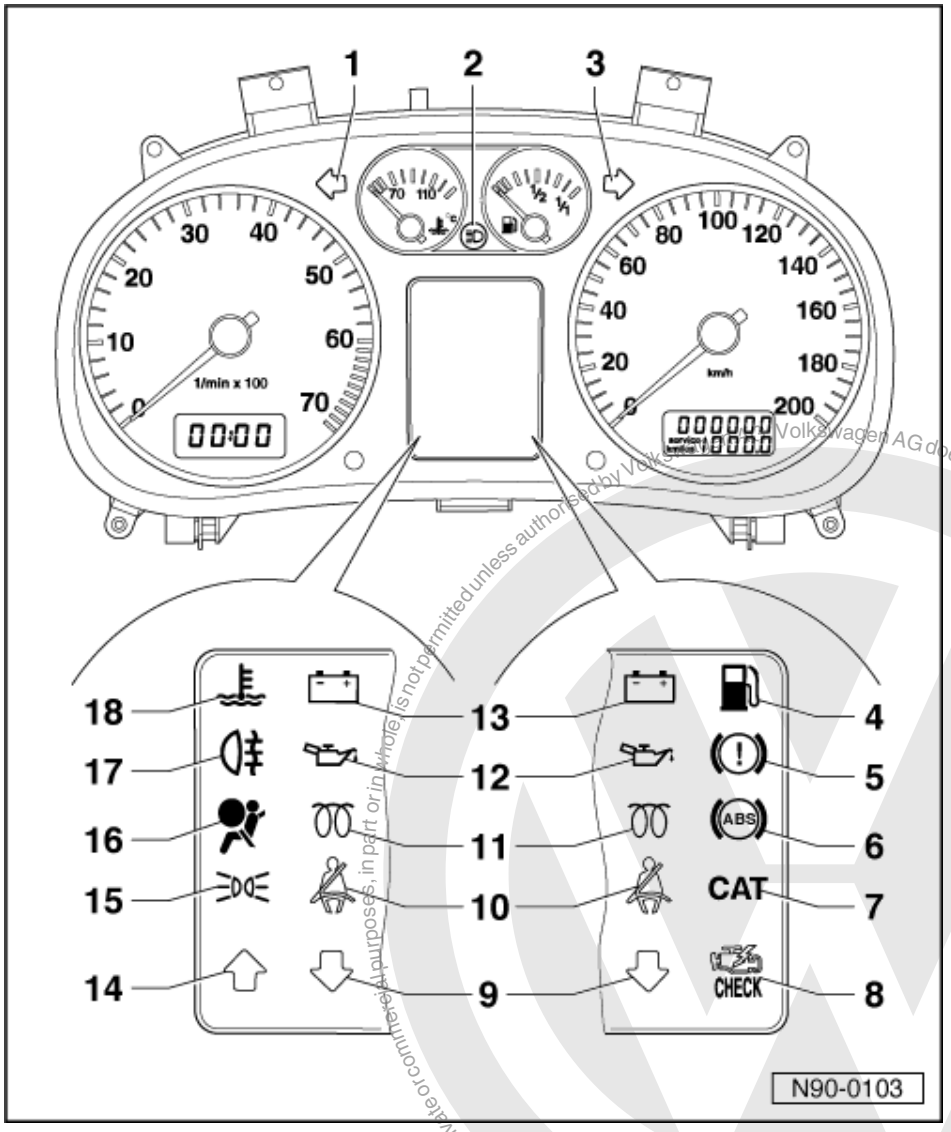


Dash panel insert (except Polo GTI)

*Note:*

*The employment of the warning lamps in the respective dash panel insert is dependent upon the equipment level, engine and country version.*

1 Turn signal, left
2 Main beam
3 Turn signal, right
4 Fuel reserve indicator
5 Brake warning lamp/handbrake warning lamp
brake system fault warning lamp
6 Anti-locking brake system (ABS)
7 Exhaust emission warning lamp (only Japan)

Protected by copyright. Copying for private or commercial purposes, in part or in whole, is not permitted unless authorised by Volkswagen AG. Copyright by Volkswagen AG. Volkswagen AG does not guarantee or accept any liability with respect to the correctness of information in this document.
satelettronica

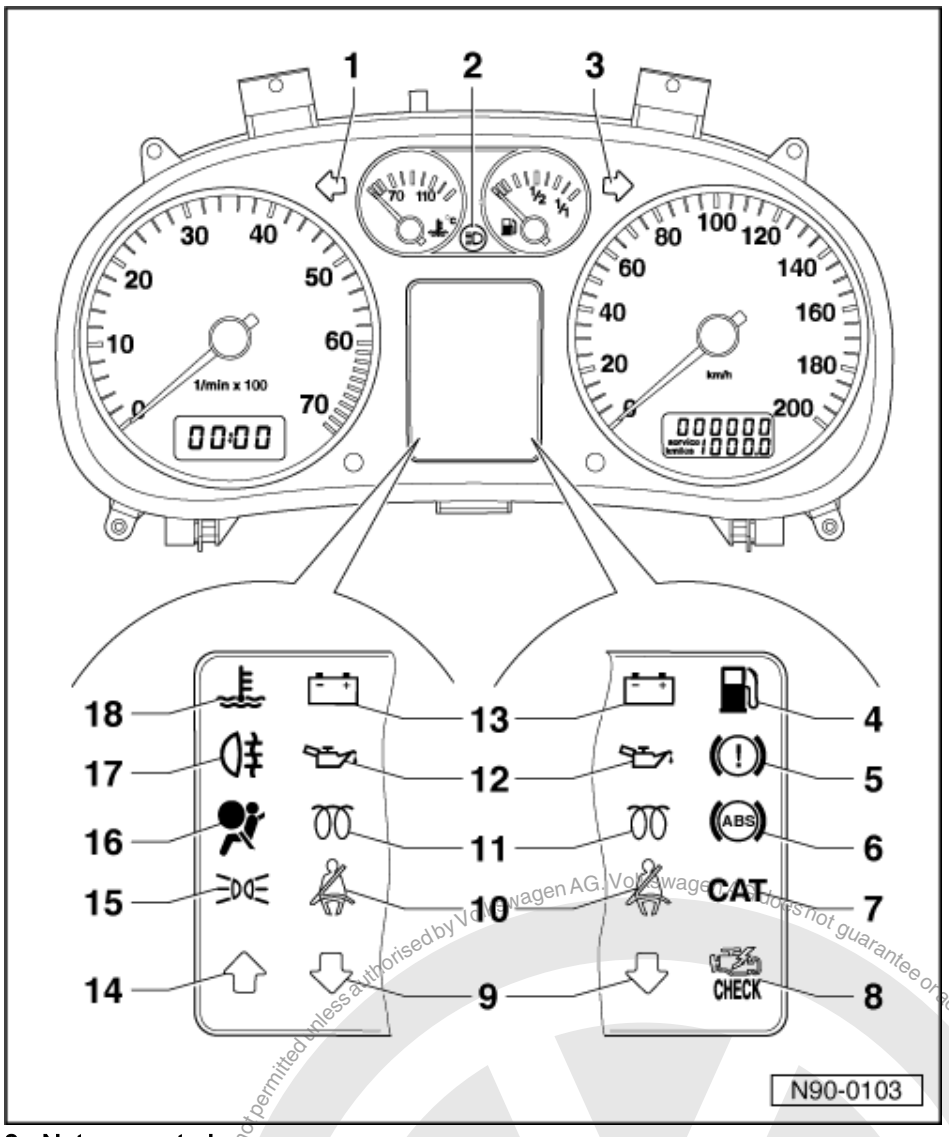


8 Not connected
9 Not connected
10 Not connected
11 Glow period warning lamp
12 Oil pressure
13 Alternator
14 Not connected
15 Side light and driving light warning lamp (terminal 58)
16 Airbag
17 Rear fog lights
18 Coolant

Protected by copyright. Copying for private or commercial purposes, in part or in whole, is not permitted unless authorised by Volkswagen AG. Volkswagen does not guarantee or accept any liability with respect to the correctness of information in this document. Copyright by Volkswagen AG.
satelettronica

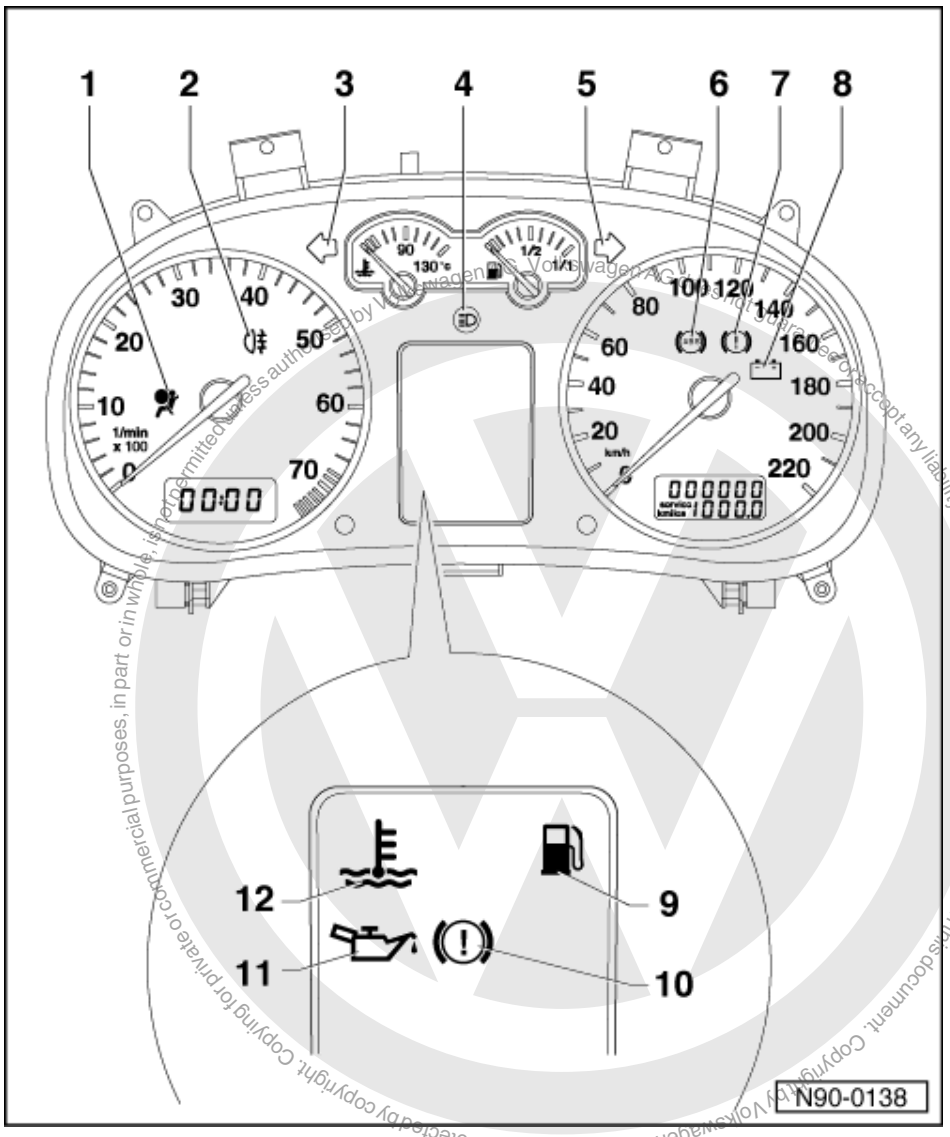


Dash panel insert Polo GTI

*Note:*

*Dash panel insert with blue instrument illumination*

1 Airbag
2 Rear fog lights
3 Turn signal, left
4 Main beam
5 Turn signal, right
6 Anti-locking brake system (ABS)
7 Brake warning lamp/handbrake warning lamp
8 Alternator
9 Fuel reserve indicator

satelettronica

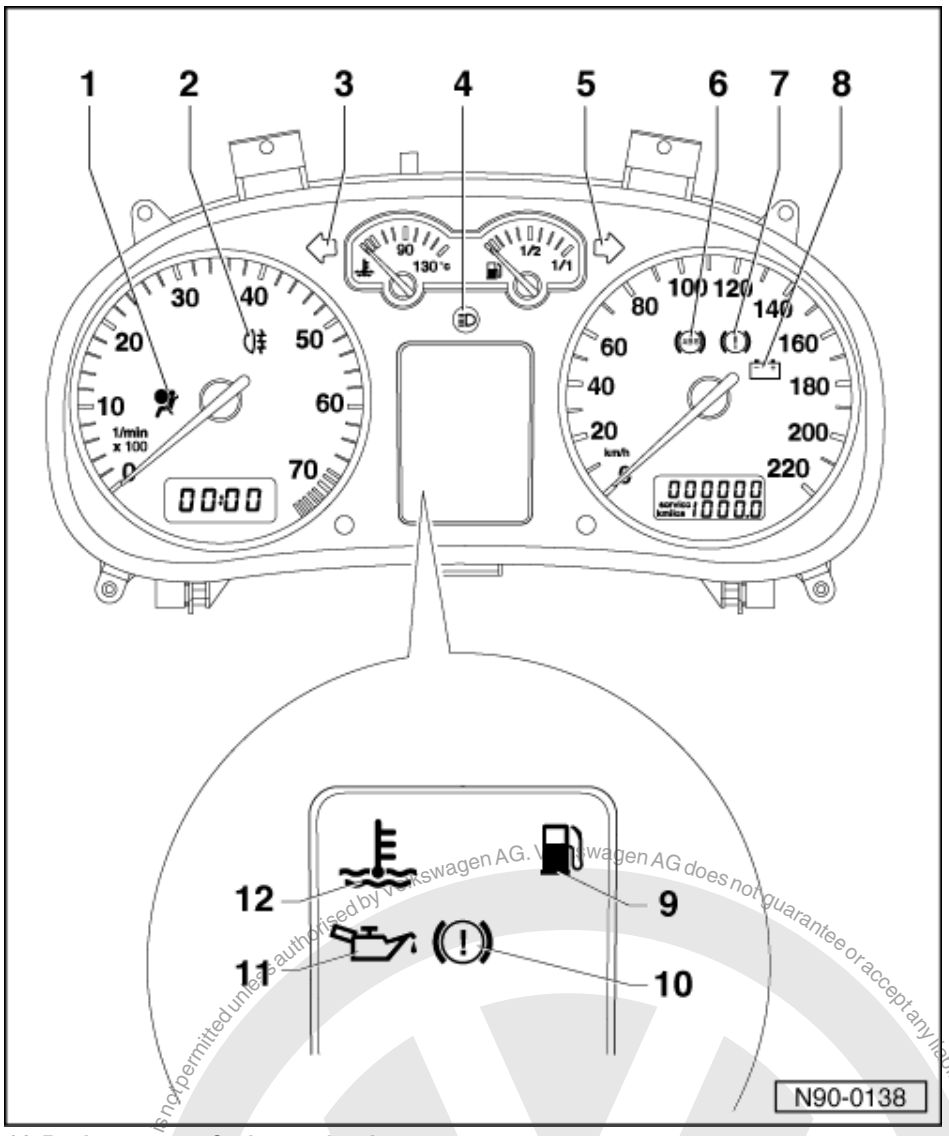


10 Brake system fault warning lamp
11 Oil pressure
12 Coolant

## 2.5 - Connector contact assignment on dash panel insert

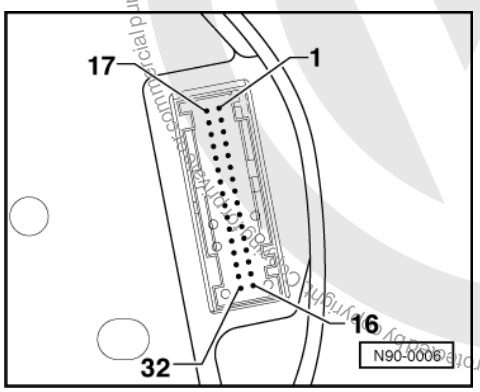


satelettronica

-> 32-pin connector T32a, blue

1 - Terminal 15, positive
2 - Warning lamp for turn signal, right
3 - Output signal from electronic speedometer
4 - Vacant
5 - Fuel gauge
6 - Airbag
7 - Terminal 31, sender earth
8 - Coolant temperature gauge
9 - Terminal 31, earth
10 - Oil pressure switch
11 - Speed signal
12 - Warning lamp for alternator, terminal 61
13 - Warning lamp for glow period (only Diesel engine) or warning lamp for catalyst monitor (only certain countries)

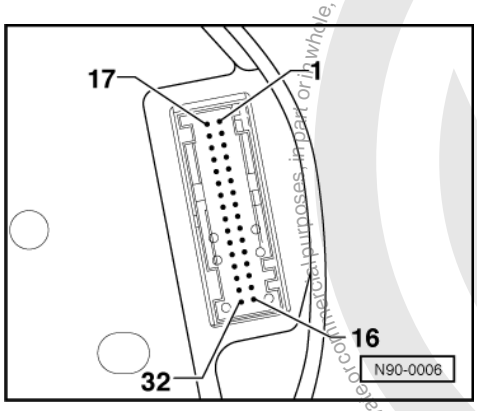


14 - Warning lamp for rear fog light
15 - Vacant
16 - Vacant
17 - Warning lamp for main beam, terminal 56a
18 - Warning lamp for turn signal, left
19 - Anti-locking brake system (ABS)
20 - Dash panel insert illumination, terminal 58d
21 - Signal for driver's door open
22 - Coolant shortage indicator
23 - Terminal 30, positive
24 - Terminal 31, earth
25 - Self-diagnosis/K-wire
26 - Parking light right
27 - Parking light left
28 - Input signal to electronic speedometer
29 - Warning lamp for brake system
30 - S-contact
31 - Seat belt warning system (only certain countries)
32 - Warning lamp for side lights (only certain countries) or emissions warning lamp (only USA)

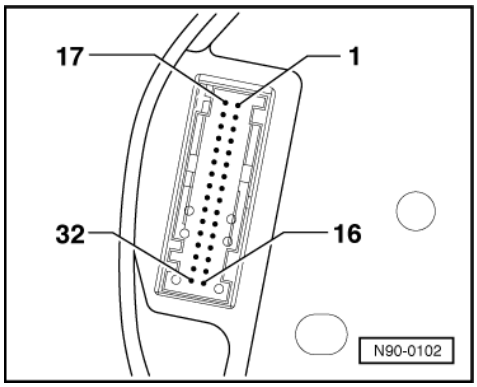


Proprietary copy of VDAI. Copying for private or commercial purposes, in part or in whole, is not permitted unless authorised by Volkswagen AG. Volkswagen AG does not guarantee or accept any liability with respect to the correctness of information in this document. Copyright by Volkswagen AG.
satelettronica

-> 32-pin connector T32, green

21 - Oil temperature sender
32 - Consumption signal

*Notes:*

- Connector not available on all dash panel inserts.
- All pins not listed are vacant.

# 3 - Dash panel insert for vehicles 10.99 >

## 3.1 - Dash panel insert for vehicles 10.99 >

## 3.2 - Removing and installing dash panel insert

The dash panel insert is equipped with self-diagnosis which makes fault finding easier.

Therefore before removing the dash panel insert, perform the following work:

- Interrogate fault memory with fault reader V.A.G 1551.

=> Electrical system self-diagnosis; Repair group 01; Dash panel insert self-diagnosis for vehicles 10.99 ▸; Performing self-diagnosis Dash panel insert self-diagnosis for vehicles 10.99 ▸ Performing self-diagnosis

- Read service interval display values and distance recorder with fault reader V.A.G 1551 and note the values.

=> Electrical system self-diagnosis; Repair group 01; Dash panel insert self-diagnosis for vehicles 10.99 ▸; Adapting service interval data following replacement of dash panel insert Dash panel insert self-diagnosis for vehicles 10.99 ▸ Adapting service interval data following replacement of dash panel insert

If the fault dictates that the dash panel insert requires replacement the noted figures can be entered in the new dash panel insert.

**Removing dash panel insert**

Warning!
Before working on the electrical system disconnect the battery earth strap.

*Note:*

- When the battery is reconnected, check the vehicle equipment (radio, clock, electrical windows) as per Workshop Manual and/or the owner's manual.
- The steering wheel must be removed to remove the dash panel insert.

=> General body repairs, interior; Repair group 69; Airbag; Removing and installing steering wheel 10.99 ▸ Airbag

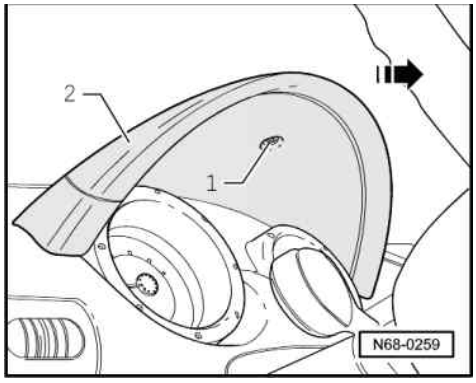


Protected by copyright. Copying for private or commercial purposes, in part or in whole, is not permitted unless authorised by Volkswagen AG. Volkswagen AG does not guarantee or accept any liability with respect to the correctness of information in this document. Copyright by Volkswagen AG.
satelettronica

- -> Remove dash panel insert hood.
- Remove screw -1-.
- Unclip upper part of dash panel insert hood -2- in direction of arrow.

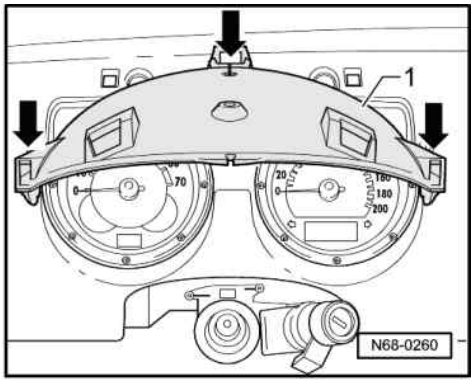


- -> In order to remove the lower part of the dash panel insert hood -1-, the three screws -arrows- must be removed.

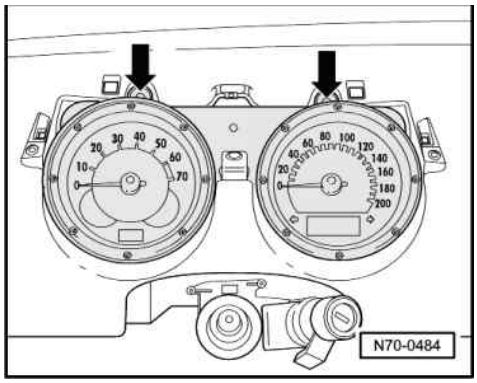


- -> Now the two screws -arrows- securing the dash panel insert can be removed.
- Pull off connectors on dash panel insert.
- Take out dash panel insert.

**Installing dash panel insert**

The installation of the dash panel insert is basically the reverse to the removal sequence.

Protected by copyright. Copying for private or commercial purposes, in part or in whole, is not permitted unless authorised by Volkswagen AG. Volkswagen AG does not guarantee or accept any liability with respect to the correctness of information in this document. Copyright by Volkswagen AG.
satelitronica

## 3.3 - Dash panel insert, rear, vehicles 10.99 >

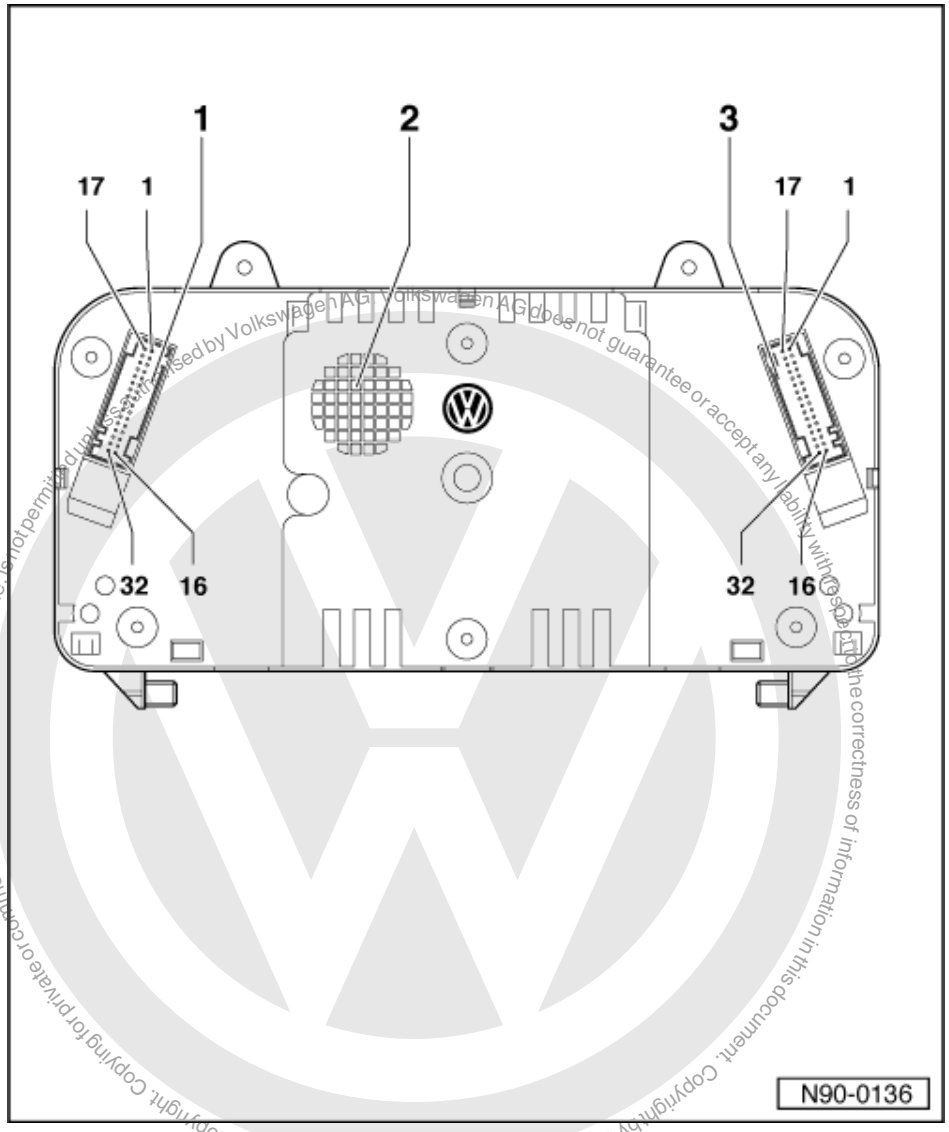


Protected by copyright. Copying for private or commercial purposes, in part or in whole, is not permitted unless authorised by Volkswagen AG. Volkswagen AG does not guarantee or accept any liability with respect to the correctness of information in this document. Copyright by Volkswagen AG.

*Notes:*

- The dash panel insert is equipped with a self-diagnosis which eases fault detection.
- The dash panel insert must not be dismantled.
- Fault finding programmes for specific systems and current circuits

=> Current flow diagrams, Electrical fault finding and fitting locations

1 32-pin connector
- Blue
- Connector contact assignment
  => Page 96

satelettronica

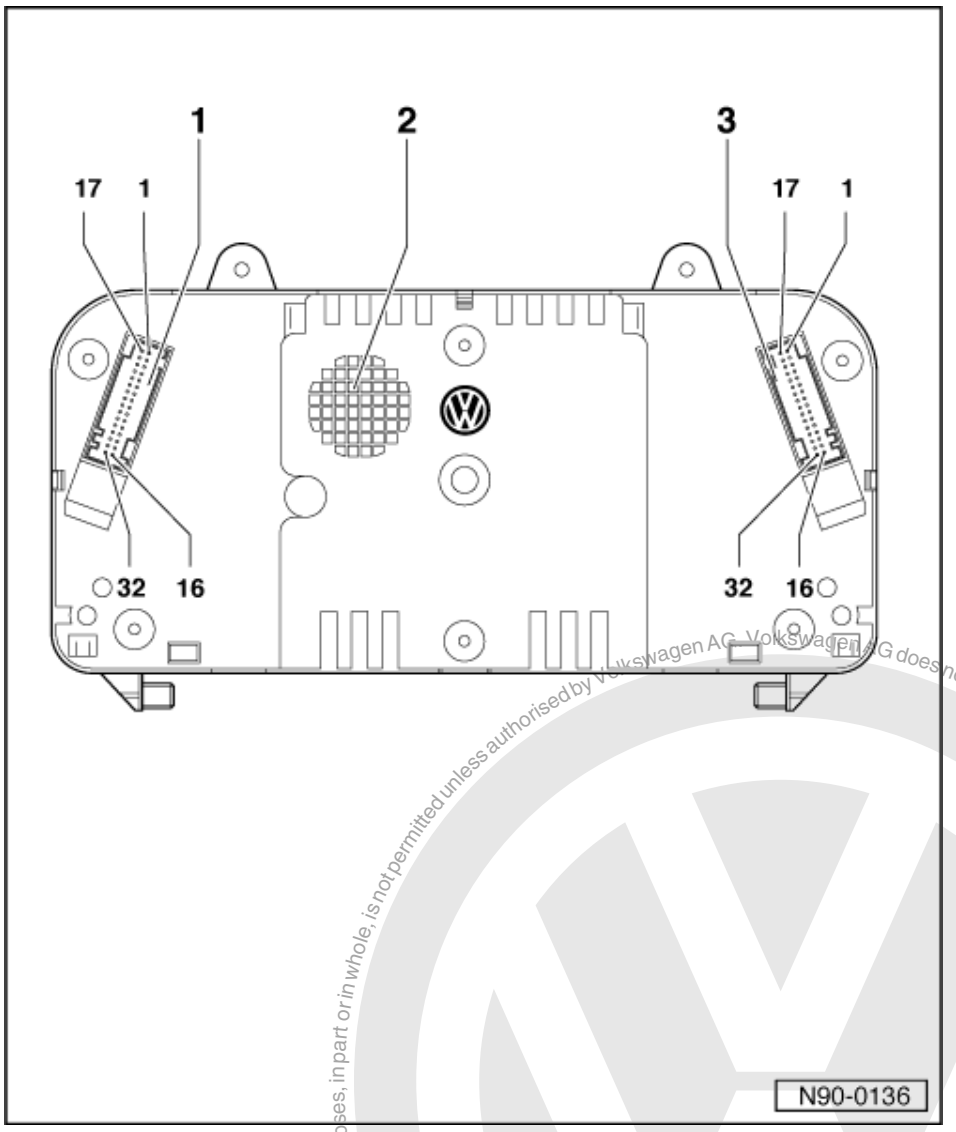


2 Warning buzzer
- Oil pressure warning
- Lights switched on warning
- Seat belt warning (only certain countries)
- Speed warning (only certain countries)

3 32 pin connector
- Green
- Connector contact assignment
  => Page 96

Protected by copyright. Copying for private or commercial purposes, in part or in whole, is not permitted unless authorised by Volkswagen AG. Volkswagen AG does not guarantee or accept any liability with respect to the correctness of information in this document. Copyright by Volkswagen AG.
satelettronica

## 3.4 - Warning lamp symbols in dash panel insert (apart from Polo GTI)

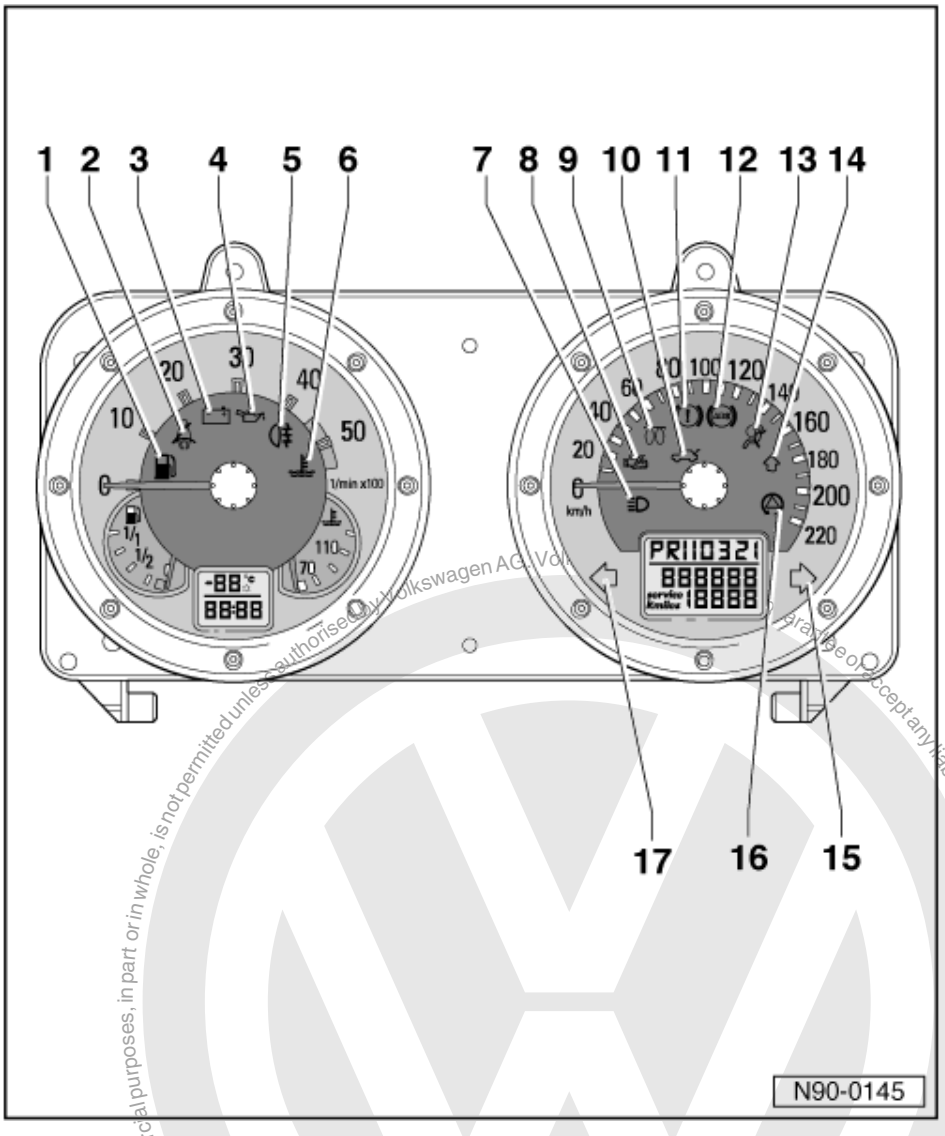


*Note:*

*The employment of the warning lamps in the dash panel insert is dependent upon the equipment level, engine and country version.*

1 For fuel reserve
2 For seat belt
3 For alternator charge control
4 For oil/oil pressure
5 For rear fog light
6 For coolant temperature

satelettronica

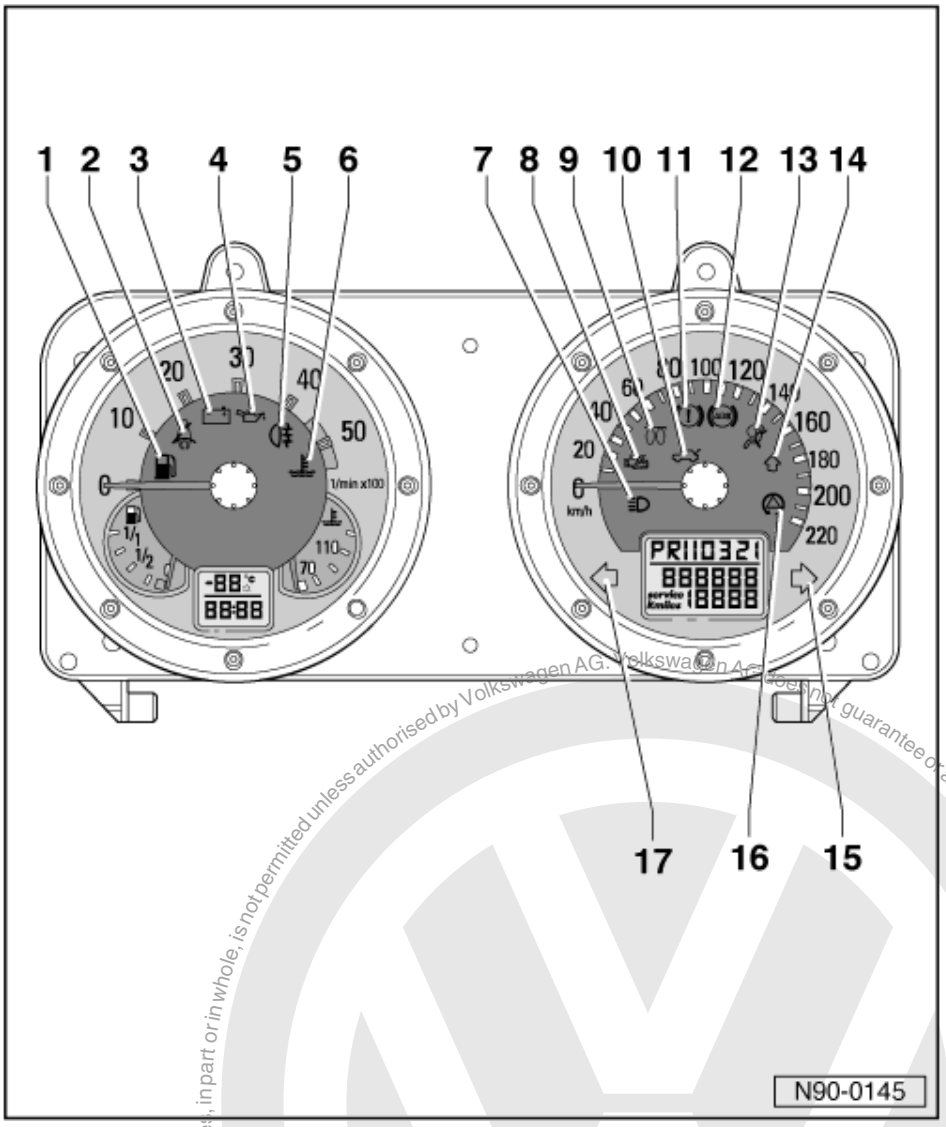


7 For main beam
8 For exhaust emission warning lamp
9 For pre-glow control
10 For tailgate open
11 For brake warning/brake system fault warning
12 For ABS
13 For Airbag
14 Gear change up display
15 For right turn signal
16 For ESP
17 For left turn signal

Protected by copyright. Copying for private or commercial purposes, in part or in whole, is not permitted unless authorised by Volkswagen AG. Volkswagen AG does not guarantee or accept any liability with respect to the correctness of information in this document. Copyright by Volkswagen AG.
satelettronica

## 3.5 - Description of display instruments (apart from Polo GTI)

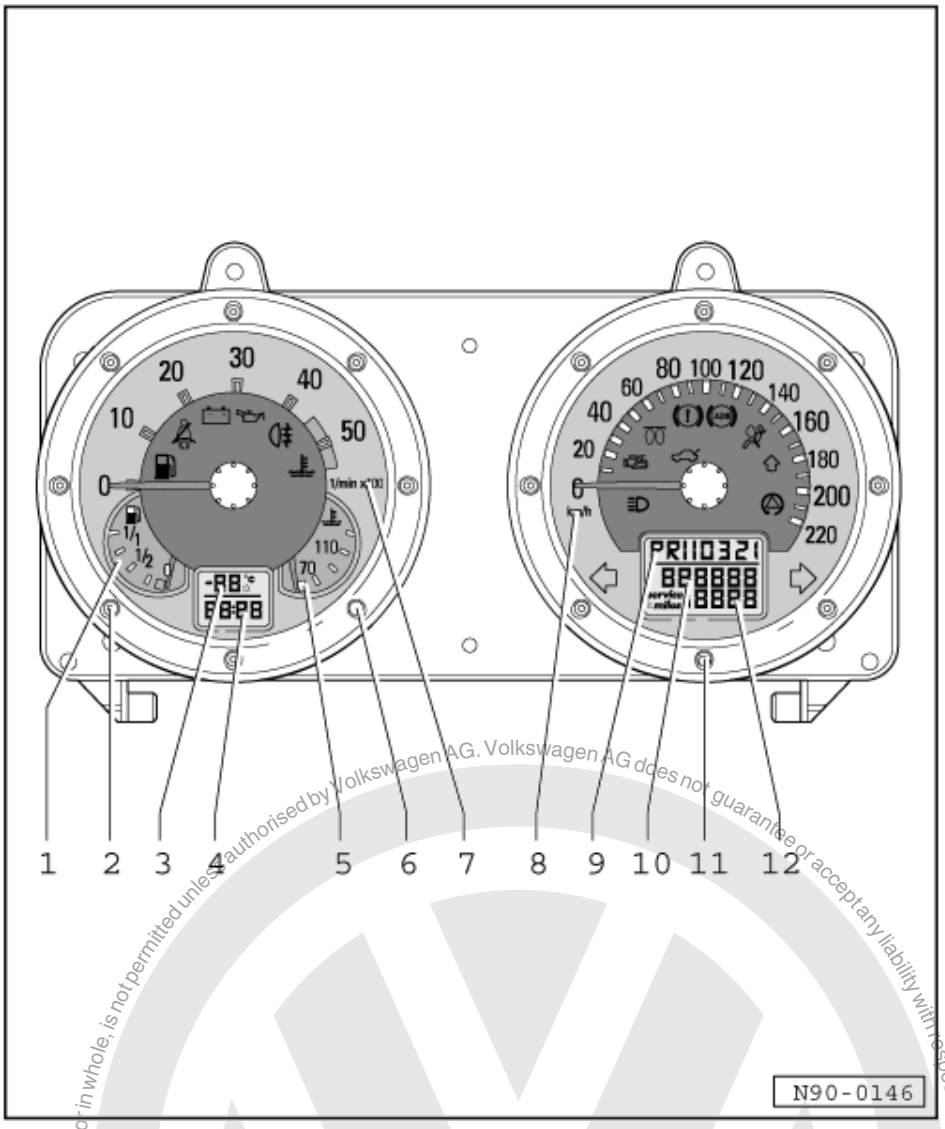


1 Fuel gauge
2 Button to adjust clock hours
3 Ambient temperature display
4 Digital clock display
5 Coolant temperature gauge
6 Button to adjust clock minutes

Protected by copyright. Copying for private or commercial purposes, in part or in whole, is not permitted unless authorised by Volkswagen AG. Volkswagen AG does not guarantee or accept any liability with respect to the correctness of information in this document. Copyright by Volkswagen AG.
satelettronica

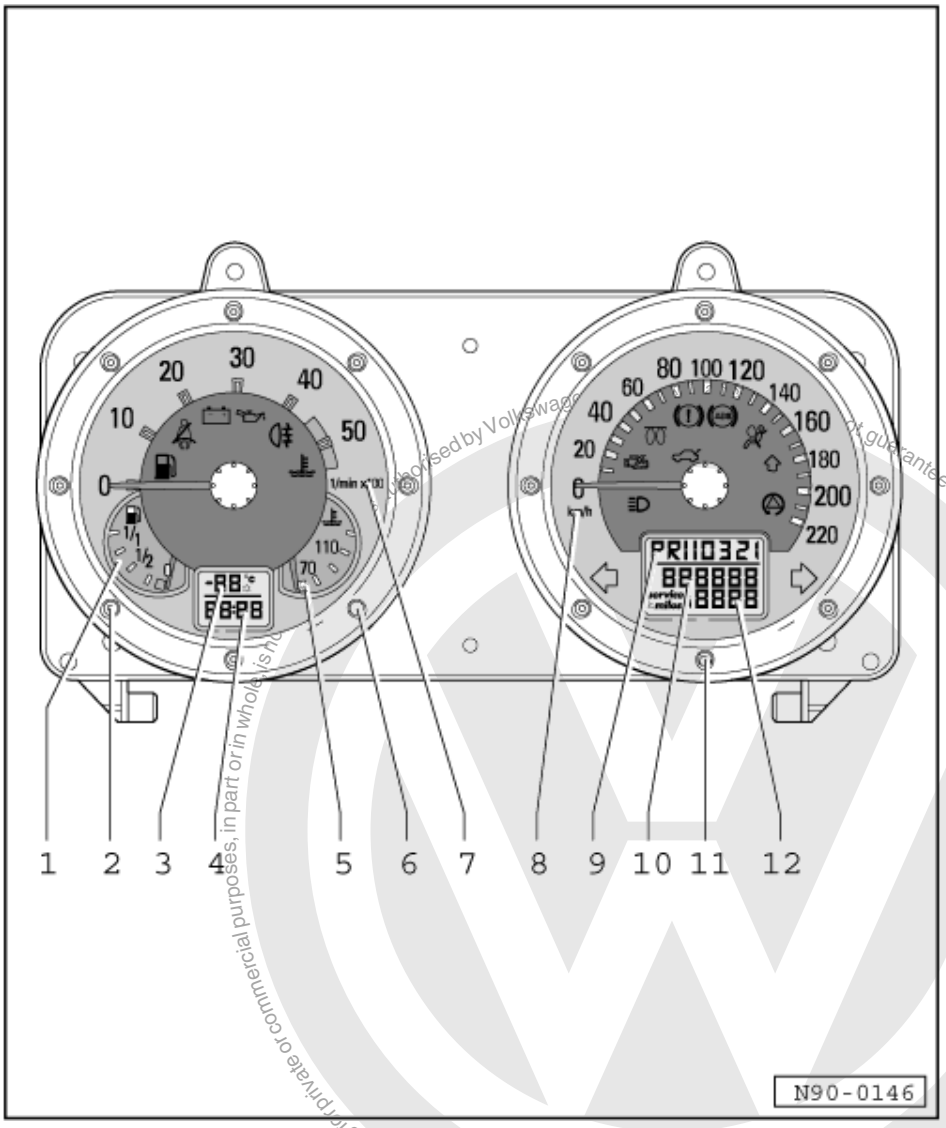


7 Rev counter
8 Speedometer
9 Gear selected display
10 Odometer
11 Button to zero trip recorder
12 Trip recorder

Protected by copyright. Copying for private or commercial purposes, in part or in whole, is not permitted unless authorised by Volkswagen AG. Copyright by Volkswagen AG. We do not guarantee or accept any liability with respect to the correctness of information in this document.
satelettronica

## 3.6 - Warning lamp symbols in dash panel insert (only Polo GTI)

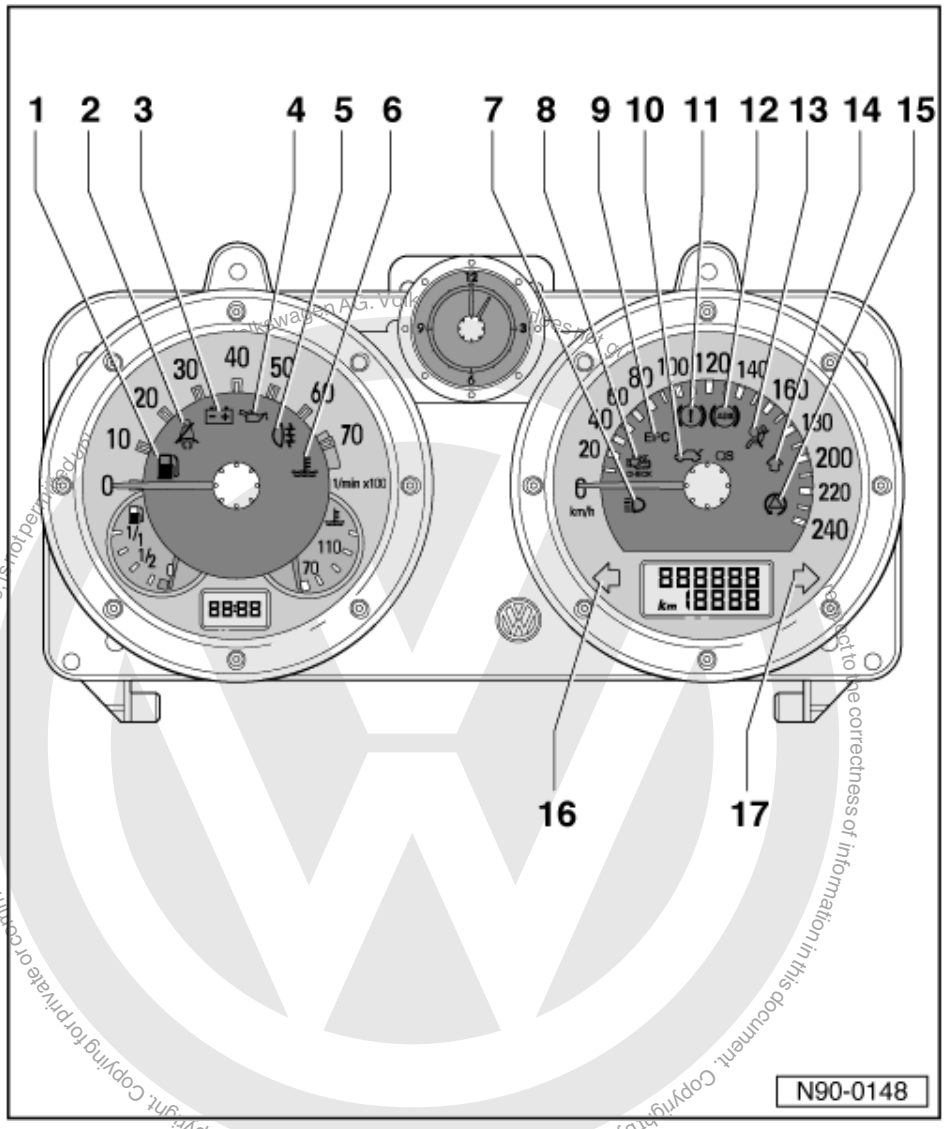


*Note:*

*The employment of the warning lamps in the dash panel insert is dependent upon the equipment level, engine and country version.*

1 For fuel reserve
2 For seat belt
3 For alternator charge control
4 For oil/oil pressure
5 For rear fog light
6 For coolant temperature

satelettronica

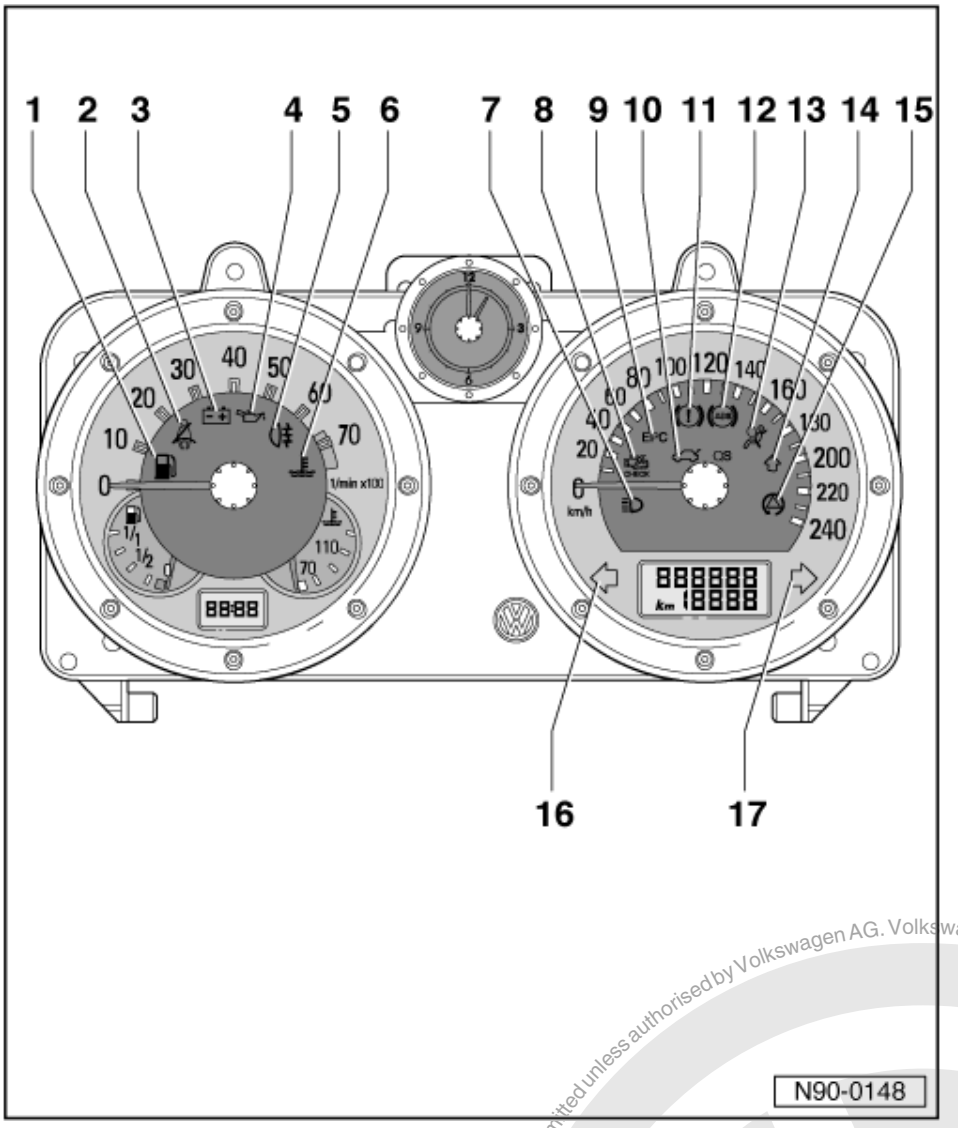


7 For main beam
8 For exhaust emission warning lamp
9 For EPC
10 For tailgate open
11 For brake warning/brake system fault warning
12 For ABS
13 For Airbag
14 Gear change up display
15 For ESP
16 For left turn signal
17 For right turn signal

Protected by copyright. Copying for private or commercial purposes, in part or whole, is not permitted unless authorised by Volkswagen AG. Volkswagen AG does not guarantee or accept any liability with respect to the correctness of information in this document. Copyright by Volkswagen AG.
satelettronica

## 3.7 - Description of display instruments (only Polo GTI)

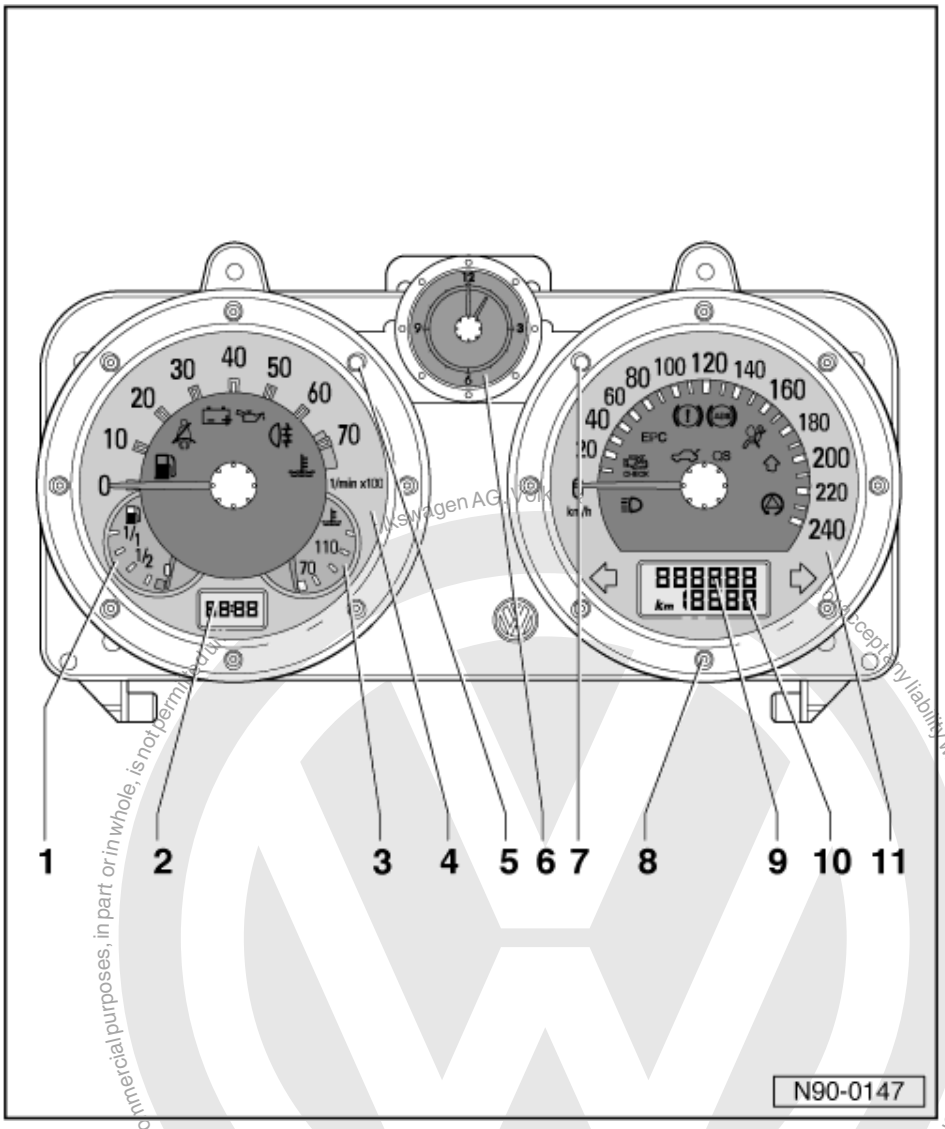


1 Fuel gauge
2 Ambient temperature display
3 Coolant temperature gauge
4 Rev counter
5 Button to adjust clock - back
6 Digital clock display
7 Button to adjust clock - forward
8 Button to zero trip recorder
9 Odometer
10 Trip recorder
11 Speedometer

satelettronica

## 3.8 - Connector contact assignment on dash panel insert

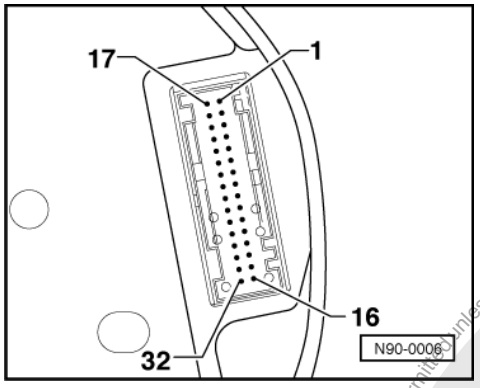


-> 32-pin connector T32a, blue

1 - Terminal 15, positive
2 - Warning lamp for turn signal, right
3 - Output signal from electronic speedometer
4 - Vacant
5 - Fuel gauge
6 - Airbag
7 - Terminal 31, sender earth
8 - Coolant temperature gauge
9 - Terminal 31, earth
10 - Oil pressure switch
11 - Speed signal
12 - Warning lamp for alternator, terminal 61
13 - Warning lamp for glow period (only Diesel engine) or warning lamp for catalyst monitor (only certain countries)

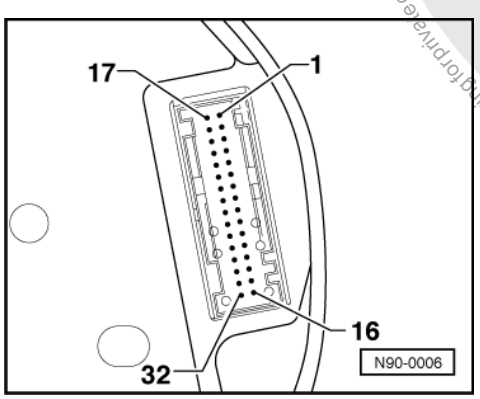


14 - Warning lamp for rear fog light
15 - Oil pressure switch (0.25 hpa)
16 - Tailgate open warning lamp
17 - Warning lamp for main beam, terminal 56a
18 - Warning lamp for turn signal, left
19 - Anti-locking brake system (ABS)
20 - Dash panel insert illumination, terminal 58d
21 - Signal for driver's door open
22 - Coolant shortage indicator
23 - Terminal 30, positive
24 - Terminal 31, earth
25 - Self-diagnosis/K-wire
26 - Parking light right
27 - Parking light left
28 - Input signal to electronic speedometer
29 - Warning lamp for brake system
30 - S-contact
31 - Seat belt warning system (only certain countries)

Protected by copyright. Copying for private or commercial purposes, in part or in whole, is not permitted unless authorised by Volkswagen AG. Volkswagen AG does not guarantee or accept any liability with respect to the correctness of information in this document. Copyright by Volkswagen AG.
satelettronica

32 - Warning lamp for side lights (only certain countries) or emissions warning lamp (only USA)

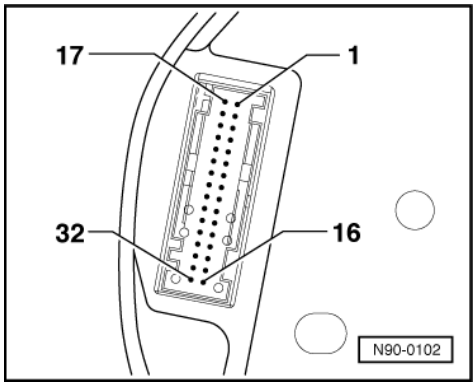


-> 32-pin connector T32, green

10 - Fuel tank warning (only USA)
12 - Bi-directional wire (A/C)
19 - CAN-High (Input)
20 - CAN-Low (Input)
21 - Oil temperature sender
26 - Ambient temperature
27 - CAN-High (Output)
28 - CAN-Low (Output)
32 - Consumption signal

*Note:*

- All pins not listed are vacant.

# 4 - Service interval display for vehicles > 1997

## 4.1 - Service interval display for vehicles > 1997

### Function

The service interval display electronics is comprised of, amongst other items:

- a time recorder

and

- a distance recorder.

The electronics evaluates both recorders so that the customer is informed

- after a predetermined time period is exceeded or
- after a predetermined distance is reached

via the service interval display that a service is required (according to whichever occurs first).

### Service interval display

The display appears for a few seconds after switching on the ignition in place of the mileage display in the odometer.

If no service is necessary IN 00 will be displayed.

Copyright by Volkswagen AG. Reproduced by permission only. Volkswagen AG does not guarantee or accept any liability with respect to the correctness of information in this document. Copyright by Volkswagen AG. Reproduced by permission only. Copyright for private or commercial purposes, in part or in whole, is not permitted unless authorised by Volkswagen AG.
satelettronica

If a service is due, the following appears in the display for about 3 seconds even after starting the engine:

| | |
|---|---|
| OEL | (Engine oil change) or |
| IN 01 | (Inspection service every 12 months) or |
| IN 02 | (Inspection service every 30,000 km/20,000 miles) |

After a service has been carried out, each service affected must be called-up individually and zeroed. If e.g. the inspection service IN 02 is carried out, OEL, IN 01 and IN 02 must be zeroed.

- If inspection service IN 02 has been carried out, the OEL,IN 01 and IN 02 must be zeroed.
- If the Inspection service IN 01 is carried out, the OEL and IN 01 must be zeroed.

## 4.2 - Zeroing service interval display

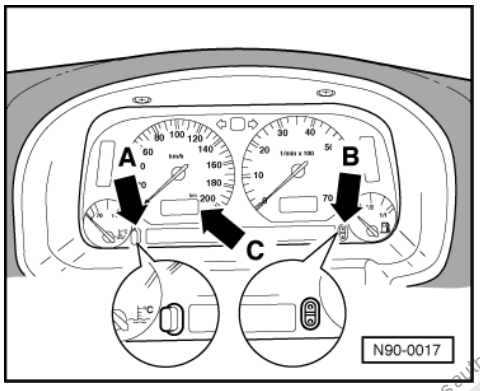


- -> With ignition switched on, press and hold the button -arrow A- below the speedometer.
- Switch off ignition and release button. The word OEL can be seen in the display.
- Press the digital clock lower button -arrow B- until, five dashes (- - - - -) appear. Only then is the service reset.
- By again pressing the button -arrow A- below the speedometer the other service types will be displayed and can be reset individually.
- Switch on ignition and after IN 00 appears switch off again.

## 4.3 - Flexible service interval display

From model year 1996 the flexible service interval display has been introduced but only on vehicles with 1.9 ltr./47kW - Cat. diesel engine, engine code AEF.

### Function

The flexible service interval display not only electronically monitors the time and distance but additionally monitors the engine thermal and particle loading and uses these in calculating the service interval.

Depending on vehicle use (how driven/engine loading) results in distances of between 7 500 and 15 000 km (approx. 5 000 to 10 000 miles) or time periods of between 8 and 12 months to the next oil change.

The flexible interval display contents is different.

The display appears for a few seconds after switching on the ignition in place of the mileage display in the odometer.

If no service is necessary INSP-0 will be displayed.

If a service is due, the following appears in the display for about 3 seconds even after starting the engine:

Protected by copyright. Copyright by Volkswagen AG. Copyright by Volkswagen AG. Volkswagen AG does not guarantee or accept any liability with respect to the correctness of information in this document. Copyright by Volkswagen AG. Reproduction, in part or in whole, is not permitted unless authorised by Volkswagen AG. Volkswagen AG does not guarantee or accept any liability with respect to the correctness of information in this document. Copyright by Volkswagen AG.
satelettronica

Service table

| Indicated on display : | Type of service : |
|---|---|
| OEL alternating with INSP | Engine oil change |
| or : | |
| INSP-1 | Inspection service every 12 months |
| or : | |
| INSP-2 | Inspection service every 30,000 km (approx. 20,000 miles) |

After a service has been carried out, each service affected must be called-up individually and zeroed.

## 4.4 - Zeroing flexible service interval display

- If the Inspection service INSP-2 is carried out, the OEL,INSP-1 and INSP-2must be zeroed.
- If the Inspection service INSP-1 is carried out, the OEL and INSP-1 must be zeroed.

Resetting service interval display:

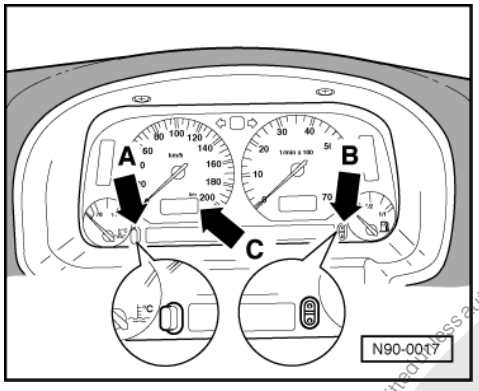


- -> With ignition switched on, press and hold the button -arrow A- below the speedometer.
- Switch off ignition and release button. The word OEL can be seen in the display.
- Press the digital clock lower button -arrow B- until, five dashes (- - - - -) appear. Only then is the service reset.
- By again pressing the button -arrow A- below the speedometer the other service types will be displayed and can be reset individually.

- Switch on ignition and after IN 00 appears switch off again.

## 4.5 - Entering service interval data

*Notes:*

- Only necessary after replacing a dash panel insert.
- The data must be read off before exchanging the dash panel insert.
- If the data cannot be read off (defective dash panel insert) the data from the service schedule and the odometer display must be entered.

Protected by copyright. Copying for non-commercial purposes, in part or in whole, is not permitted unless authorised by Volkswagen AG. Volkswagen AG does not guarantee or accept any liability with respect to the correctness of information in this document. Copyright by Volkswagen AG.
satelettronica

Displaying service details

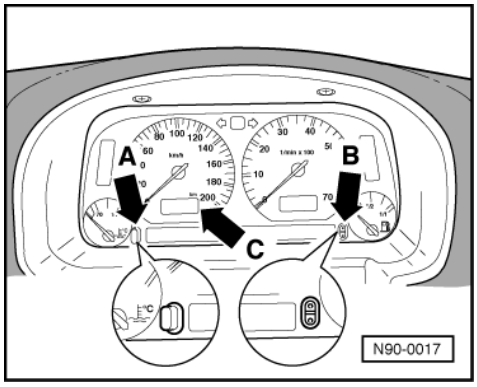


- -> With ignition switched on press button -arrow A- below the speedo and hold.
- By additionally pressing the digital clock minute button (lower button) -arrow B- the service details will be displayed. OEL1.Swill appear in the odometer -arrow C-.
- By again pressing the button -arrow A- below the speedo the following displays will appear one after the other: OEL2.S,IN01.S,IN02.S.

*Note:*

*The .S stands for setting.*

Explanation of service details

| | |
|---|---|
| OEL1.S | Distance recorder for engine oil change |
| OEL2.S | Time recorder for engine oil change |
| IN01.S | Time recorder for inspection service every 12 months |
| IN02.S | Distance recorder for inspection service every 30,000 km/20,000 miles |

Entering data

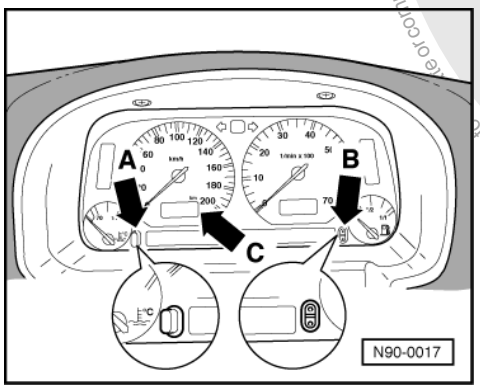


- -> By pressing the digital clock minute button (lower button) -arrow B- the time or distance still remaining prior to the next service will be displayed.
- By repeatedly pressing the button, the distance recorder will decrease in steps of 500 km and the time recorder in steps of 1 month. After the smallest figure the largest will follow again.
- If the ignition is switched off or engine started, the setting mode (entering data) will be exited.

Protected by copyright. Copying for commercial purposes, in part or whole, is not permitted unless authorised by Volkswagen AG. Volkswagen AG does not guarantee or accept any liability with respect to the correctness of information in this document. Copyright by Volkswagen AG.
satelettronica

# 5 - Service interval display for vehicles 1998 >09.99

## 5.1 - Service interval display for vehicles 1998 >09.99

Volkswagen AG. Volkswagen AG does not guarantee or accept any liability with respect to the correctness of information in this document. Copyright by Volkswagen AG. Protected copyright. Copying for private or commercial purposes, in part or in whole, is not permitted unless authorised by Volkswagen AG.

### Function

The service interval display electronics is comprised of, amongst other items:

- a time recorder

and

- a distance recorder.

The electronics evaluates both recorders so that the customer is informed

- after a predetermined time period is exceeded or
- after a predetermined distance is reached

via the service interval display that a service is required (according to whichever occurs first).

***Note:***

*On vehicles 1998 ‣ with engine code AEF, the thermal condition and level of carbon in the engine oil is also used to calculate the service intervals.*

### Service interval display

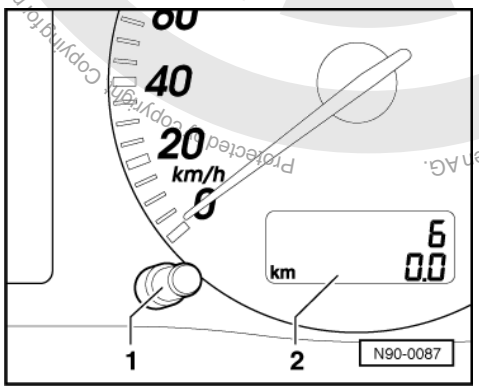


-> Between services, only the total distance and distance travelled (trip) is shown in the odometer display -2-.

If a service is due, the following appears in the trip recorder below the mileage (km) counter -2-:

- With the ignition switched off: "service"
- After switching on the ignition and for up to three minutes after starting the engine, the type of service required will be displayed. (See service table => Page 101 ).

***Note:***

*The display switches back to "service" when the engine has been running for 3 minutes.*

### Service table

| Indicated on display: | Service type: |
|---|---|
| Distance travelled and service OIL | Oil change service every 15.000 km |
| or : | |

satelettronica

| | |
|---|---|
| Distance travelled and service INSP | Inspection service every 12 months or every 30,000 km (whichever occurs first) |

One or both service types must be reset depending on which service was completed, therefore:

- If a "service OIL" (oil change service every 15,000 km) is carried out, only "service OIL" must be reset.
- If a "service INSP" (inspection service every 12 months or every 30,000 km) is carried out with oil change, "service INSP" and "service OIL" must be reset.
- If an "service INSP" (inspection service every 12 months or every 30,000 km) is carried out without oil change, only "service INSP" must be reset.

The service interval display can be reset using one of two methods:

- With trip recorder button below speedometer => Page 102

or with

- Fault reader V.A.G 1551.

=> Repair group 01

## 5.2 - Resetting service interval display

*Note:*

*When resetting the display using the trip recorder button only the distance and time counters of the actual display are reset.*

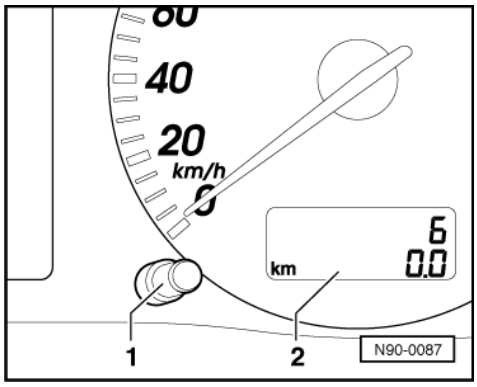


Please reset the display as follows:

- Switch off ignition.
- -> Press and hold button -1- below the speedometer.
- Switch on ignition and press button -1- (min. 10 seconds) until three dashes appear on the display ( - - - ), or the next service due appears in the display. Only then is the service reset.

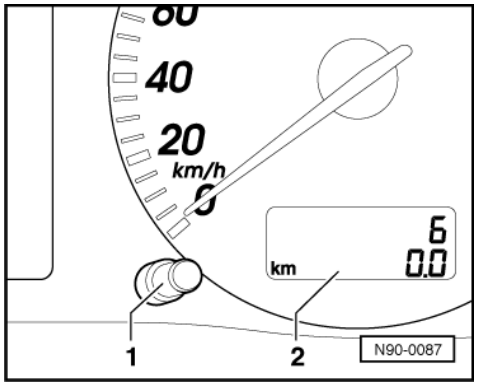


Protected by copyright. Copying for private or commercial purposes, in part or in whole, is not permitted unless authorised by Volkswagen AG. Volkswagen AG does not guarantee or accept any liability with respect to the correctness of information in this document. Copyright by Volkswagen AG.
satelettronica

- -> Release button -1-.
- Switch off ignition.

The original single journey mileage will be displayed again after the service interval display has been reset.

*Notes:*

- Note that only the actual display shown can be reset.
- To reset a further service due, repeat these steps.

Reproduction by copyright holders for private or commercial purposes, in part or in whole, is not permitted unless authorised by Volkswagen AG. Volkswagen AG does not guarantee or accept any liability with respect to the correctness of information in this document. Copyright by Volkswagen AG.

# 6 - Service interval display for vehicles 10.99 >

## 6.1 - Service interval display for vehicles 10.99 >

### Function

The service interval display electronics is comprised of, amongst other items:

- a time recorder

and

- two distance recorders.

The electronics evaluates the recorders so that the customer is informed

- after a predetermined time period is exceeded or
- after a predetermined distance is reached

via the service interval display that a service is required (according to whichever occurs first).

*Note:*

*On vehicles with engine code AEF, the thermal condition and level of carbon in the engine oil is also used to calculate the service intervals.*

### Service interval display

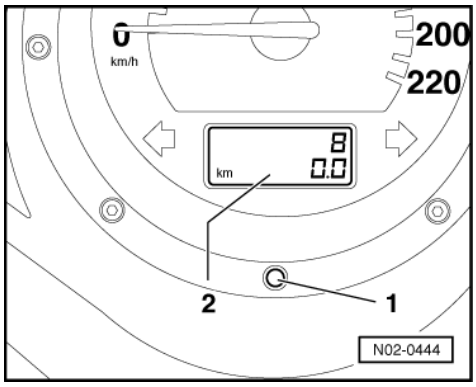


-> Between services, only the total distance and distance travelled (trip) is shown in the odometer display -2-.

If a service is due, the following appears in the trip recorder -2- (km) below the odometer:

- With the ignition switched off: "service"

satelettronica

- After switching on the ignition and for up to approx. three minutes after starting the engine, the type of service required will be displayed. (Service table).

Service table

| Indicated on display : | Type of service : |
|---|---|
| Odometer and service OIL | Oil change service every 15,000 km (approx. 10,000 miles) |
| or: | |
| Odometer and service INSP | Inspection service every 12 months or every 30,000 km (approx. 20,000 miles) |

One or both of the service types must be reset depending on type of service performed, therefore:

- If a "service OIL" is carried out, only "service OIL" must be reset.
- If a "service INSP" is carried out with oil change, "service INSP" and "service OIL" must be reset.

The service interval display can be reset using one of two methods:

- With trip recorder button below speedometer => Page 104 .

or with

- Fault reader V.A.G 1551.

=> Repair group 01

## 6.2 - Resetting service interval display

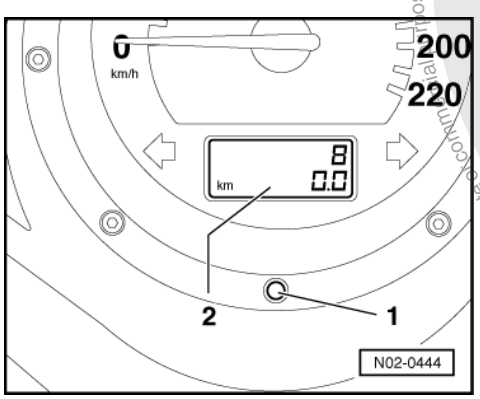


With trip recorder button

-> (With adjustment button -1- for trip recorder on dash panel insert)

*The service interval display must be reset (adaption) for*

- delivery inspection
- each oil change service
- each inspection service

Protected by copyright. Copying for private or commercial purposes, in part or in whole, is not permitted unless authorised by Volkswagen AG. Volkswagen AG does not guarantee or accept any liability with respect to the correctness of information in this document. Copyright by Volkswagen AG.
satelettronica

*Note:*

*Each service must reset individually as only the distance recorder and time counter of the actual service displayed can be reset.*

Reset the display as follows:

- Switch off ignition.

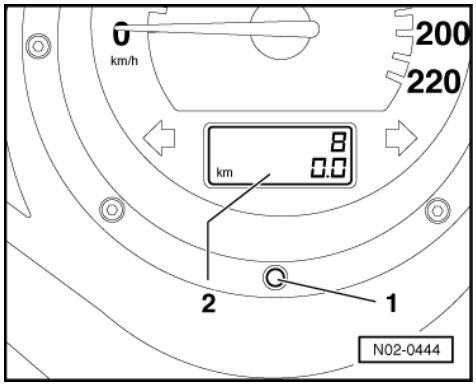


- -> Press and hold button -1- under trip recorder.
- Switch on ignition and press button -1- (min. 10 seconds) until three dashes appear on the display ( - - - ), or the next service due appears in the display. Only then is the service reset.
- Release button -1-.
- Switch off ignition.

The original single journey mileage will be displayed again after the service interval display has been reset.

*Notes:*

- Note that only the actual display shown can be reset.
- To reset a further service due, repeat these steps.

Protected by copyright. Copying for private or commercial purposes, in part or in whole, is not permitted unless authorised by Volkswagen AG. Volkswagen AG does not guarantee or accept any liability with respect to the correctness of information in this document. Copyright by Volkswagen AG.
satelettronica

# 92 - Windscreen wipe and wash system

## 1 - Windscreen wiper system

### 1.1 - Windscreen wiper system

Warning!
Before working on the electrical system disconnect the battery earth strap.

*Notes:*
- If the vehicle has a security-coded radio, obtain the correct anti-theft code number before disconnecting the battery.
- When the battery is reconnected, check operation of vehicle electrical equipment (radio, clock and electric windows etc.) according to Workshop Manual or Owner's Manual.

### 1.2 - Removing and installing windscreen washer system, vehicles > 09.99

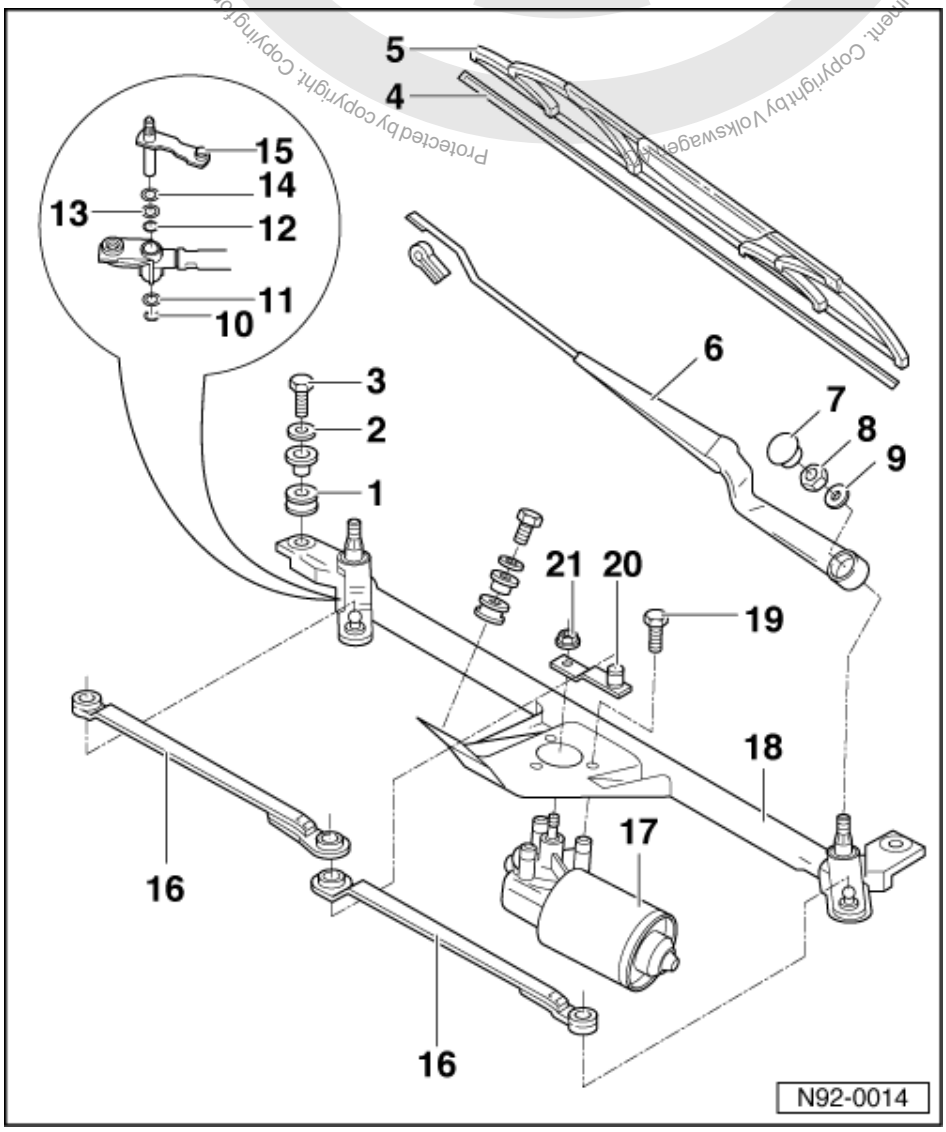


satelettronica

1 Rubber ring
2 Washer
3 Hexagon bolt M6
- 5 Nm

4 Wiper blade rubber
- Removing and installing wiper blade rubber => Page 114

5 Wiper blade
- Adjusting park position =>Fig. 2

6 Wiper arm
7 Cover cap

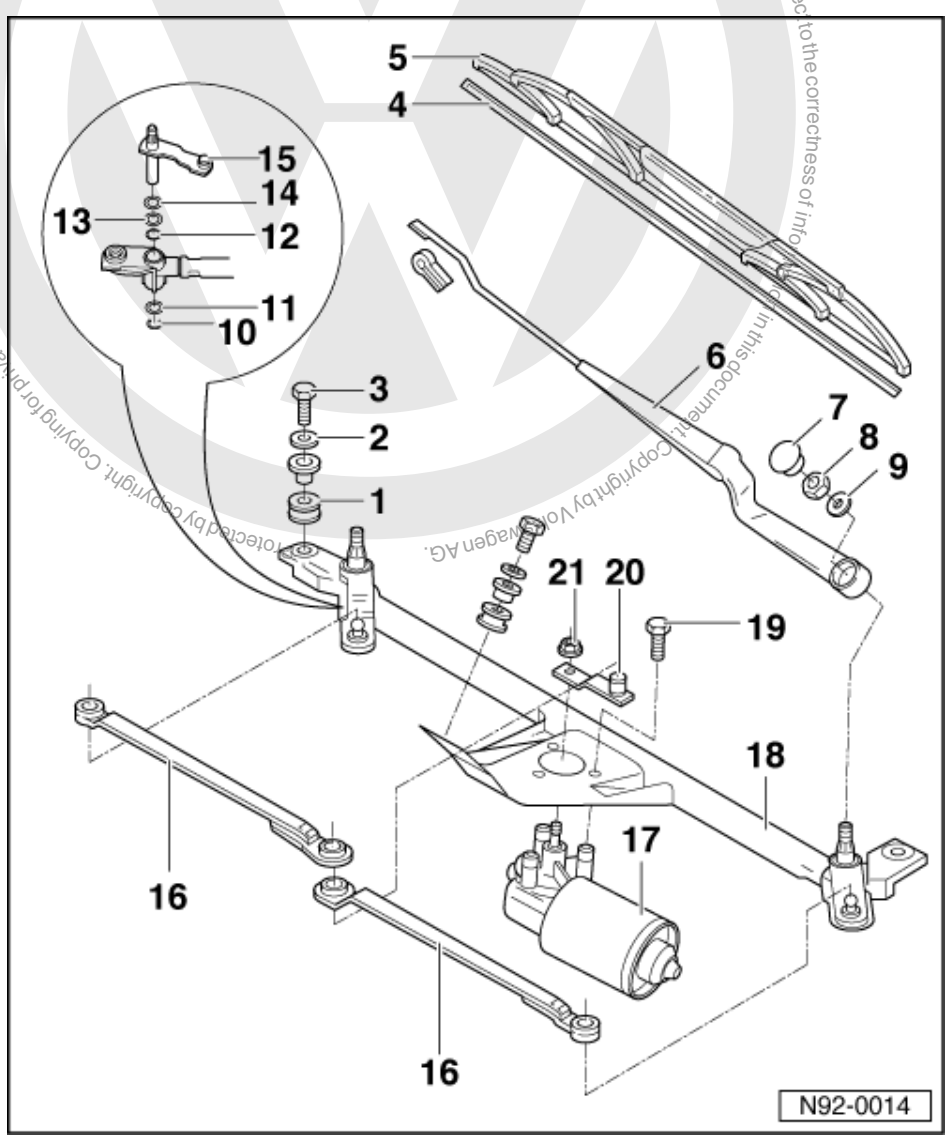


8 Hexagon nut M8
- 20 Nm

9 Washer
10 Snap ring
11 Washer
12 O ring
13 Spring washer
14 Spring washer
15 Connecting lever
16 Connecting rods

satelettronica

17 Wiper motor
- Remove wiper frame first

18 Wiper frame

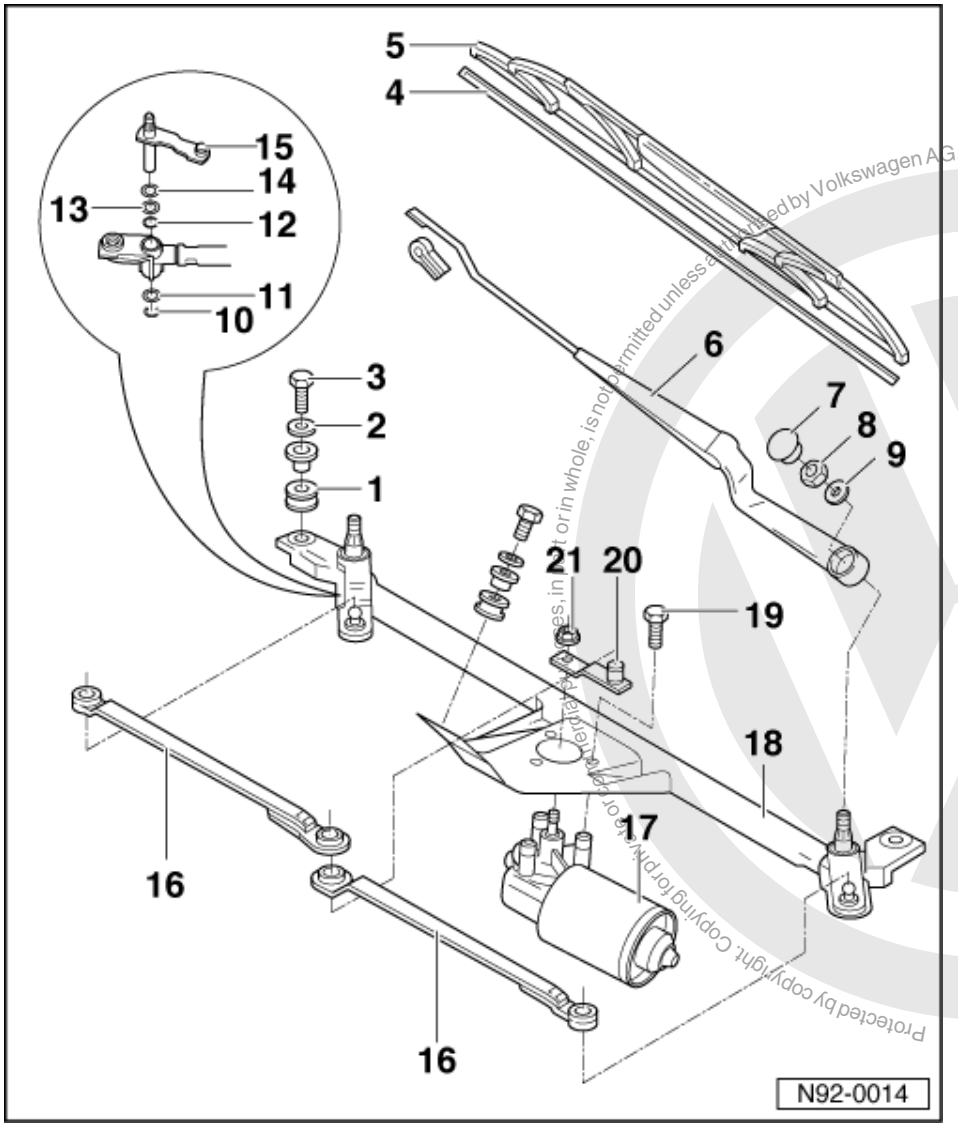


19 Hexagon bolt M6

20 Crank
- Setting park position =>Fig. 1

21 Hexagon nut M8
- 20 Nm

Fig.1 Adjusting park position

- Let wiper motor run to end position and install.

Protected by copyright. Copying for private or commercial purposes, in part or in whole, is not permitted unless authorised by Volkswagen AG. Volkswagen AG does not guarantee or accept any liability with respect to the correctness of information in this document. Copyright by Volkswagen AG.
satelettronica

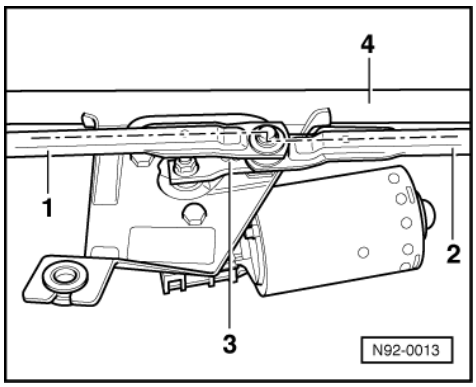


- -> Loosen crank -3- and press connecting rod -2- on first and then connecting rod -1-.
- Align connecting rods -1- and -2- corresponding to the centre line shown in the figure.
- Tighten crank -3- securing nut.

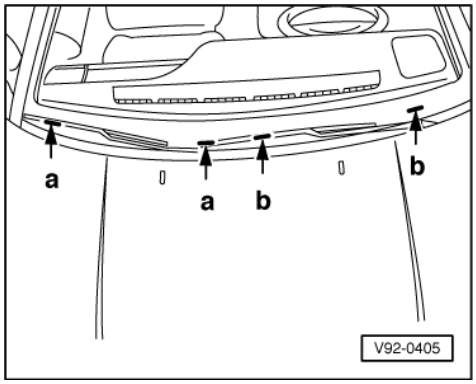


Fig.2 Adjusting park position of wiper blades

- -> Adjust wiper blades to the marks on windscreen.

a = Marks for left hand drive vehicles

b = Marks for right hand drive vehicles

## 1.3 - Removing and installing windscreen wiper system, vehicles 10.99 >

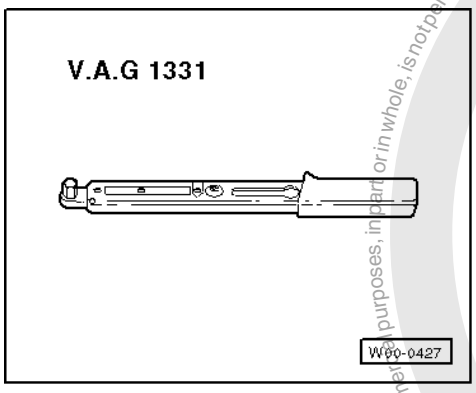


Special tools, testers, measuring instruments and auxiliary items required

- V.A.G 1331 Torque wrench (5 - 50 Nm)

satelettronica
Protected by copyright. Copying for private or commercial purposes, in part or in whole, is not permitted unless authorised by Volkswagen AG. Volkswagen AG does not guarantee or accept any liability with respect to the correctness of information in this document. Copyright by Volkswagen AG.

Removing wiper arm

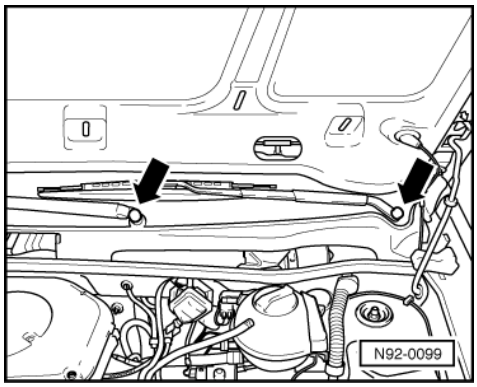


*Note:*

*Before removing the wiper arm ensure the wiper motor is in the end (park) position. Only then can the end position for the wiper arm be set correctly when installing.*

- -> Lever off black cover caps -arrows- with a screwdriver.

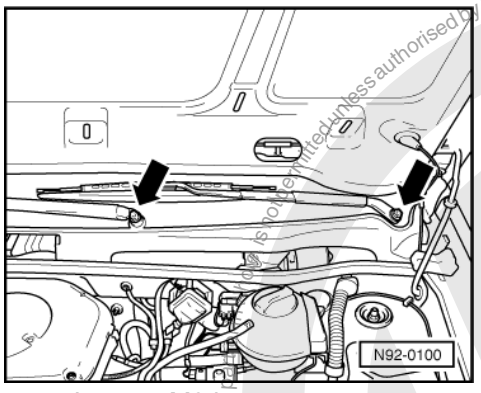


- -> Loosen M8 hexagon nuts -arrows-, but do not remove completely.
- Move wiper arms lightly until they release.
- Remove hexagon nut completely and take off wiper arms.

Removing cowl panel

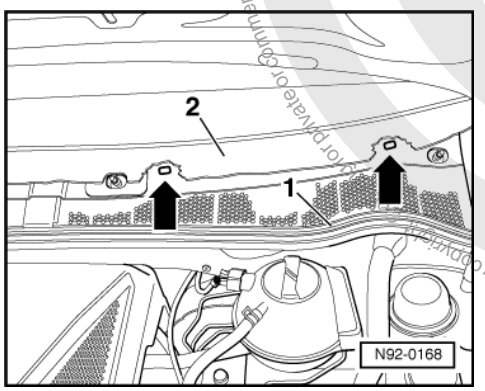


*Note:*

*The cowl panel is in two parts. In order to remove the connector rods and the wiper motor, it is necessary to remove the left side of the cowl panel.*

- -> Pull off rubber trim -1- from left to middle of vehicle.
- Lift up rubber trim -2- in area of clips -arrows- and remove the clips.

Protected by copyright. Copyright by Volkswagen AG. Volkswagen AG does not guarantee or accept any liability with respect to the correctness of information in this document. Copyright by Volkswagen AG. Reproduction is only permitted unless authorised by Volkswagen AG for private or commercial purposes.
satelettronica

- Lever cowl panel off lower edge of windscreen carefully upwards.

### Removing wiper frame with rods and wiper motor

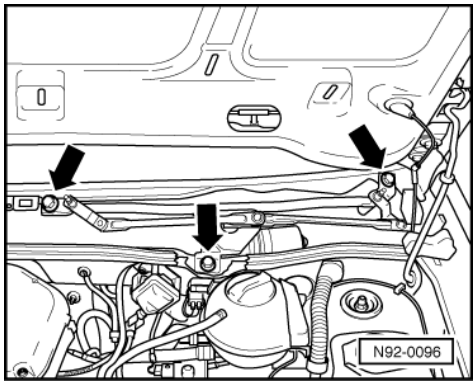


- -> Remove M6 hexagon bolts -arrows- and washers.
- Pull connector off wiper motor.
- Now take out wiper frame complete.

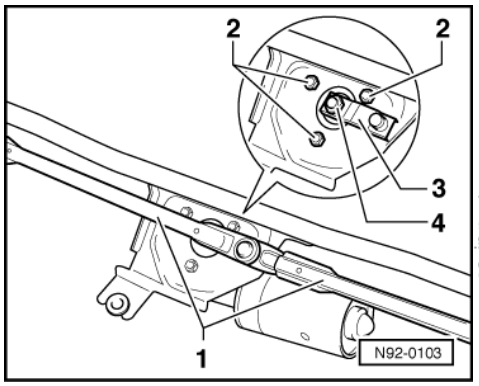


### Removing wiper motor from wiper frame

- -> Lever rods -1- off crank -3- using a large screwdriver.
- Remove M8 hexagon nut -4-.
- Remove crank -3-.
- Remove the three M6 securing bolts -2- for the wiper motor.

### Installing wiper motor in wiper frame

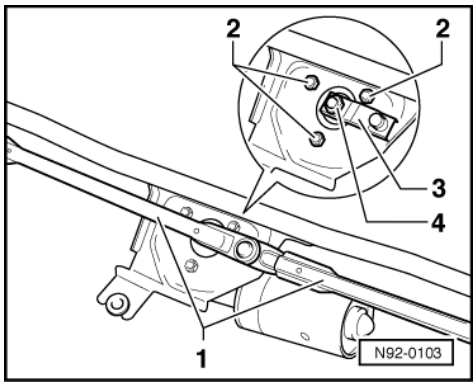


- Run motor to park position, to do this connect connector and operate wiper switch briefly.
- -> Pull off connector again and tighten motor M6 securing bolts -2-.

  Tightening torque: 5 Nm

Protected by copyright. Copying for private or commercial purposes, in part or in whole, is not permitted unless authorised by Volkswagen AG. Volkswagen AG does not guarantee or accept any liability with respect to the correctness of information in this document. Copyright by Volkswagen AG.
satelitrica

### Setting park position

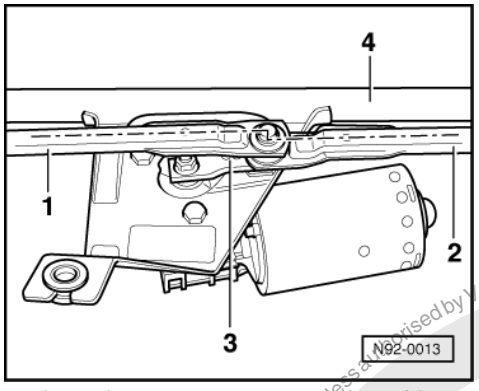


- Let wiper motor run to end position and install.
- -> Loosen crank -3- and press connecting rod -2- on first and then connecting rod -1-.
- Align connecting rods -1- and -2- corresponding to the centre line shown in the figure.
- Tighten crank -3- securing nut.

### Installing wiper frame with rods and wiper motor

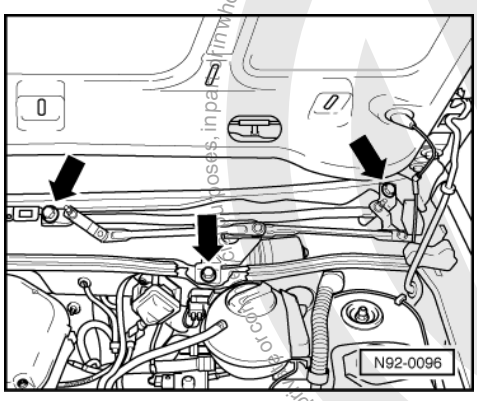


- Insert wiper frame with wiper motor.
- Reconnect connector on wiper motor.
- -> Install washer and tighten M6 hexagon nut -arrow-.

### Installing cowl panel

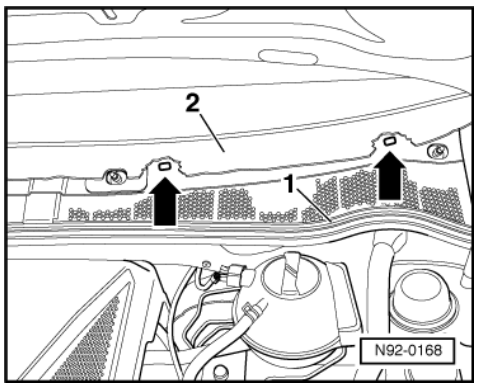


- Insert cowl panel.

*Note:*

*The left side of the cowl panel must be pushed under the right side.*

- -> Insert clips -arrows- and push down rubber trim -1-.

Protected by copyright. Copyright by Volkswagen AG.
Volkswagen AG does not guarantee or accept any liability with respect to the correctness of information in this document.
satelettronica

### Installing wiper arms

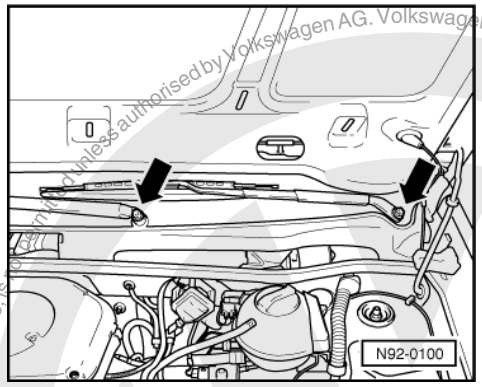


- Fit wiper arms.
- Adjusting wiper blade park position => Page 113 .
- -> Tighten M8 hexagon nuts -arrows-.

Wiper arm tightening torque: 20 Nm

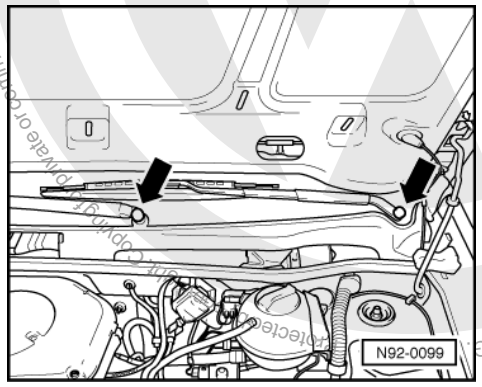


- -> Push on black cover caps -arrows-.

### Adjusting park position of wiper blades

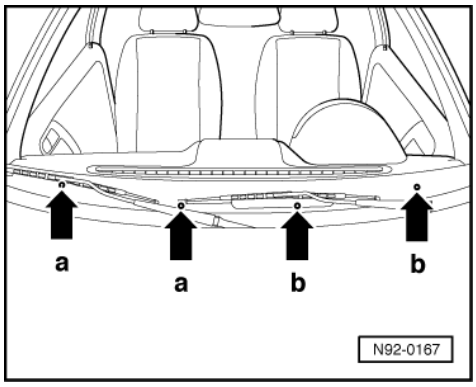


- -> Adjust wiper blades to the marks on windscreen.

a = Marks for left hand drive vehicles

b = Marks for right hand drive vehicles

Copyright by Volkswagen AG. Volkswagen AG does not guarantee or accept any liability with respect to the correctness of information in this document. Copying for private or commercial purposes, in part or in whole, is not permitted unless authorised by Volkswagen AG.

satelettronica

## 1.4 - Removing and installing wiper blade rubber

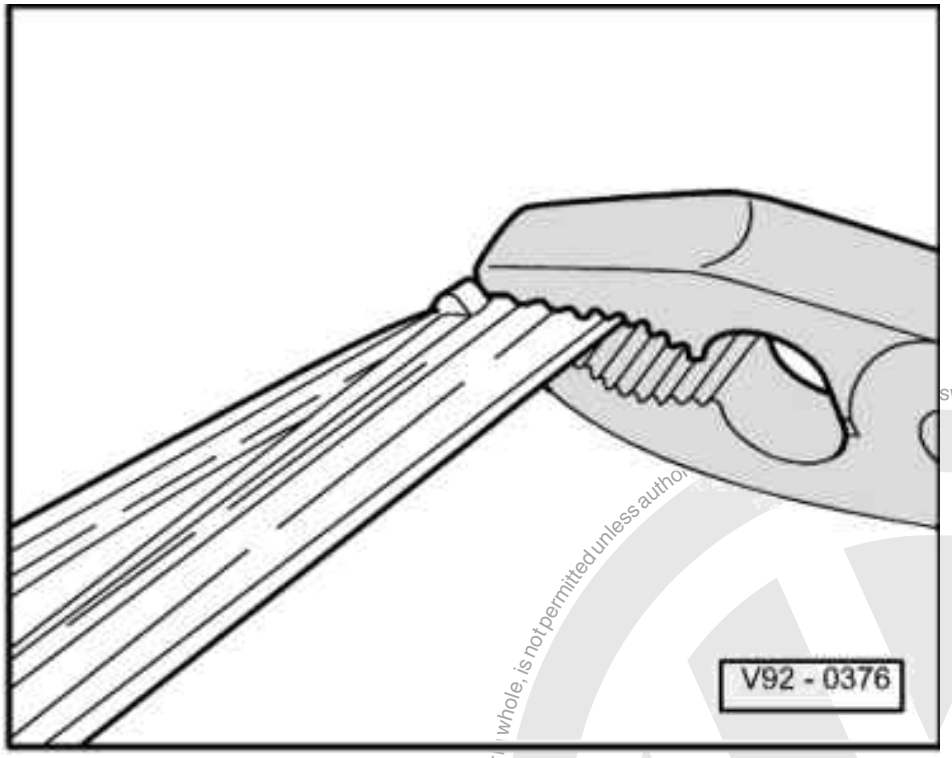


- -> Using a pair of pliers press together both steel strips on the enclosed side of the rubber, slide sideways out of the upper clip and remove rubber complete with strips from the other clips of the wiper blades.

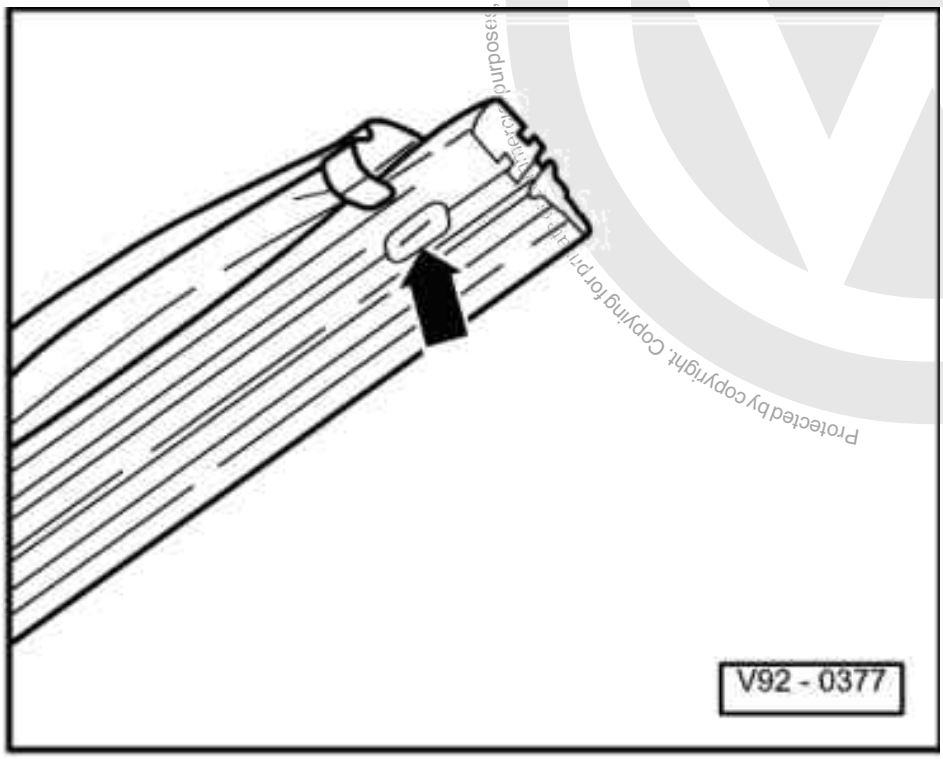


- -> Insert new rubber into lower clips of wiper blade.
- Insert both strips in the first groove of the rubber so that the recesses in the strips face the rubber and engage in the rubber lugs of the groove.

swagen AG does not guarantee or accept any liability with respect to the correctness of information in this document. Copyright by Volkswagen AG.
whole, is not permitted unless autho
Protected by copyright. Copying for p purposes, in
satelettronica

- Using pliers press both steel strips and rubber together and insert in the upper clips so that the lugs of the clips on both sides engage in the retaining slots -arrow- of the wiper blade rubber.

# 2 - Windscreen washer system

## 2.1 - Windscreen washer system

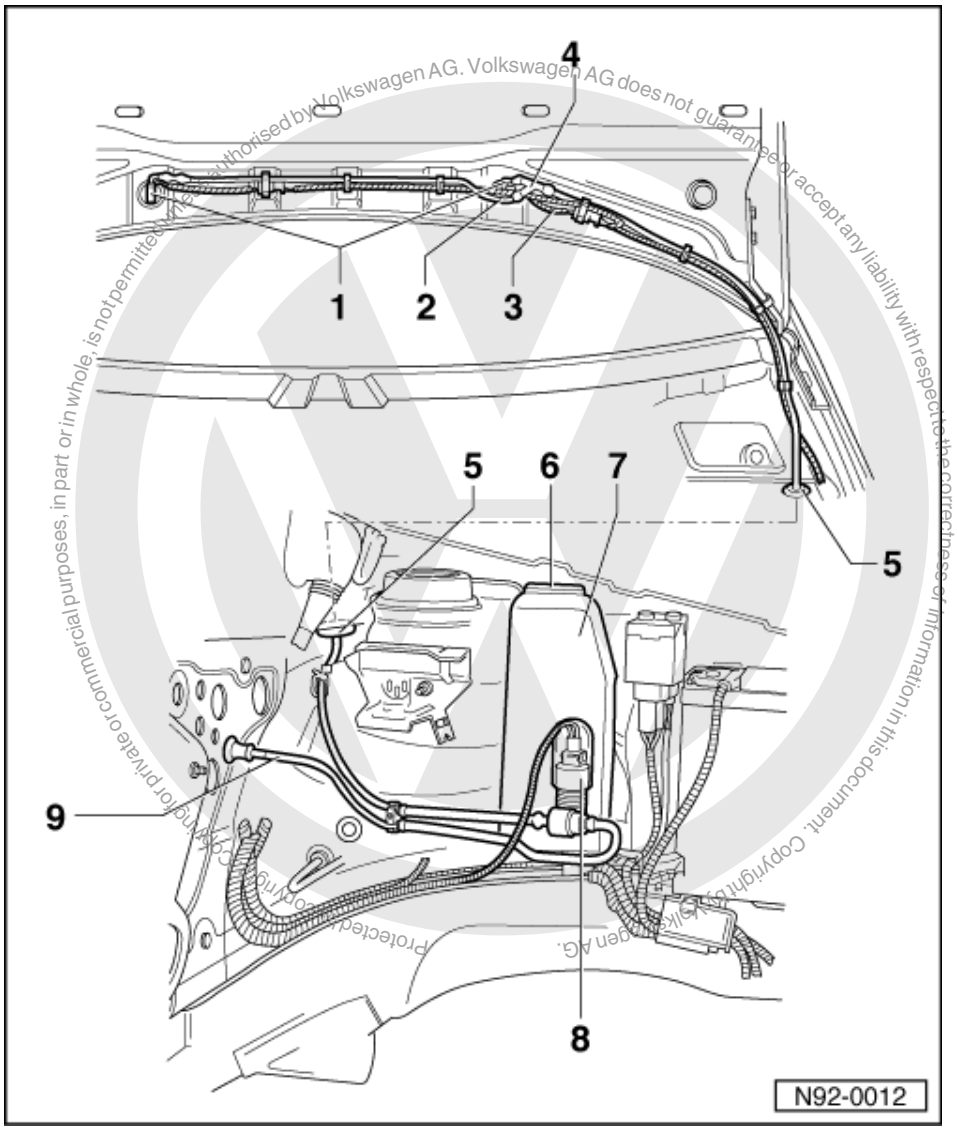


## 2.2 - Assembly overview: Windscreen washer system, vehicles > 09.99

1 Jets
- Adjusting => Page 118

2 Hose
3 Electric wire for heated washer jets
4 T-piece
5 Transfer piece
6 Container cap

satelettronica

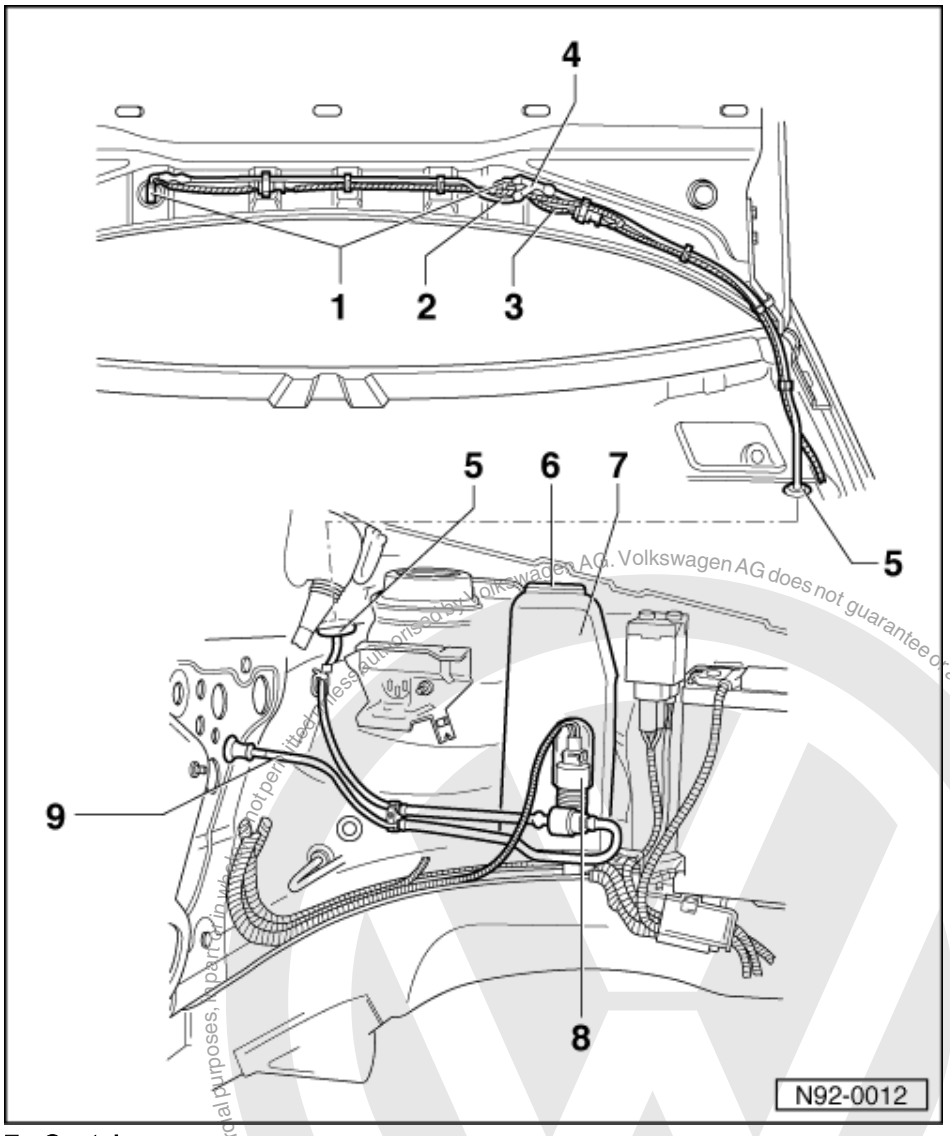


7 Container
- Capacity 2.5 ltr.

8 Windscreen washer pump

9 Hose to rear window wash and wipe system

Protected by copyright. Copying for private or commercial purposes, in part or in whole, is not permitted unless authorised by Volkswagen AG. Volkswagen AG does not guarantee or accept any liability with respect to the correctness of information in this document. Copyright by Volkswagen AG.
satelettronica

## 2.3 - Assembly overview: Windscreen washer system, vehicles 10.99 >

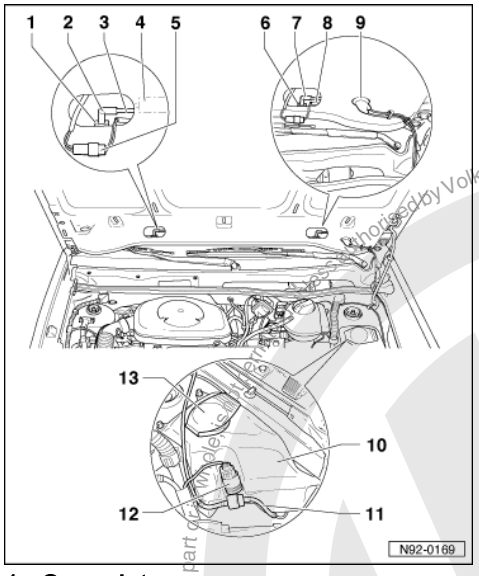


1 Spray jets
- Not adjustable
- Renew => Page 119

2 Angle piece
3 Hose
4 Noise insulation
5 Electric wire for heated washer jets
6 Jet
- Not adjustable
- Renew => Page 119

7 Angle piece

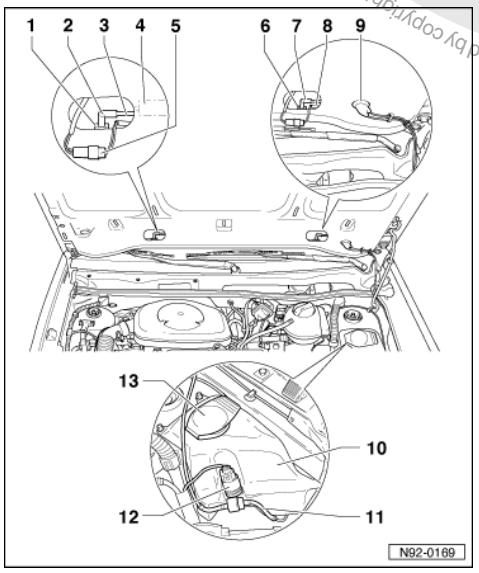


8 Electric wire for heated washer jets
9 Hose grommet
10 Container
- Removing => Page 120

11 Hose to rear window wash and wipe system
12 Windscreen washer pump
13 Container cap

Protected by copyright. Copying for private or commercial purposes, in part or in whole, is not permitted unless authorised by Volkswagen AG. Volkswagen AG does not guarantee or accept any liability with respect to the correctness of information in this document. Copyright by Volkswagen AG.
satelettronica

## 2.4 - Adjusting windscreen washer system jets

### Special tools, testers, measuring instruments and auxiliary items required

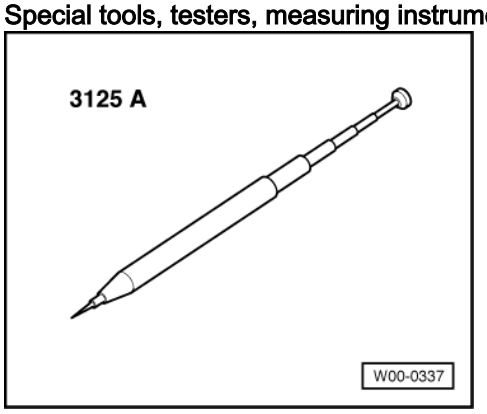


- 3125 A Washer jet adjusting tool

*Notes:*
- Renew washer jet if spray is irregular or cannot be adjusted to the prescribed setting.
- Never use a needle or similar object, as otherwise water passages in spray jets will be damaged!

### Washer jets without presetting

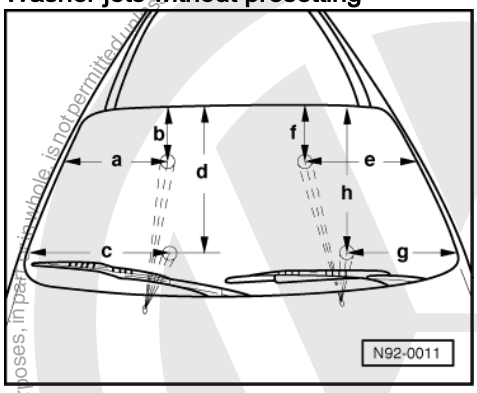


- -> Check jet setting; if necessary, adjust with washer jet tool V.A.G 3125 A.

| | | | |
|---|---|---|---|
| a | 280 mm | e | 370 mm |
| b | 290 mm | f | 270 mm |
| c | 430 mm | g | 290 mm |
| d | 560 mm | h | 560 mm |

Tolerance: ± 20 mm

### Preset washer jets (fan-type)

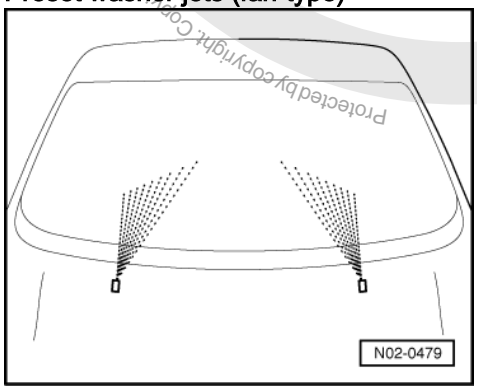


Protected by copyright. Copyright by Volkswagen AG.
Volkswagen AG. Volkswagen AG does not guarantee or accept any liability with respect to the correctness of information in this document.
satelettronica

The washer jets are preset but small height adjustments can be made.

***Note:***

*The washer jets must not be cleaned opposite to the direction of flow, e.g. blown through from the front.*

-> If both spray fields are not at same height, adjust spray direction upwards or downwards as follows:

***Note:***

*Two different types of spray jets have been installed.*

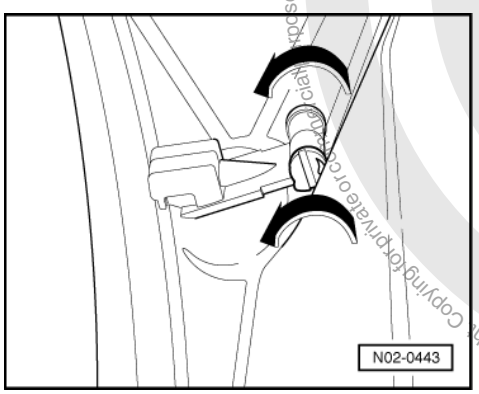


- -> To adjust spray direction upwards, turn excenter on spray jet in direction of arrow using a screwdriver.
- To adjust spray direction downwards, turn excenter on spray jet opposite to direction of arrow.

or

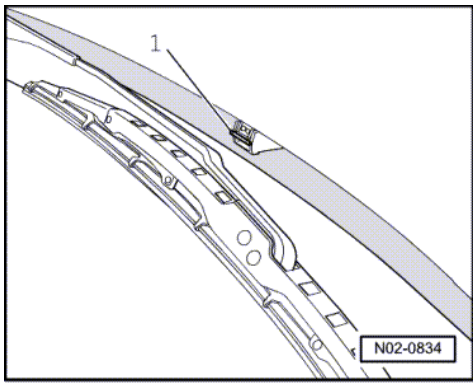


- -> Adjust spray direction on adjuster -1- by hand upwards or downwards.

## 2.5 - Renewing windscreen washer system jets, vehicles 10.99 >

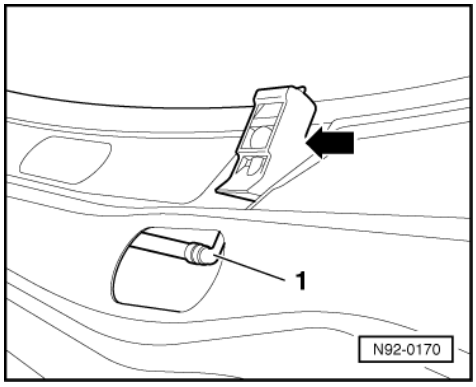


Copyright by Volkswagen AG. Volkswagen AG does not guarantee or accept any liability with respect to the correctness of information in this document. Copying for private or commercial purposes, in part or in whole, is not permitted unless authorised by Volkswagen AG.
satelettronica

- -> Pull hose -1- off washer jet and if necessary separate 2-pin connector.
- Unclip washer jet -arrows- and remove.

## 2.6 - Removing windscreen washer system reservoir, vehicles 10.99 >

- Removing battery => Page 12 .

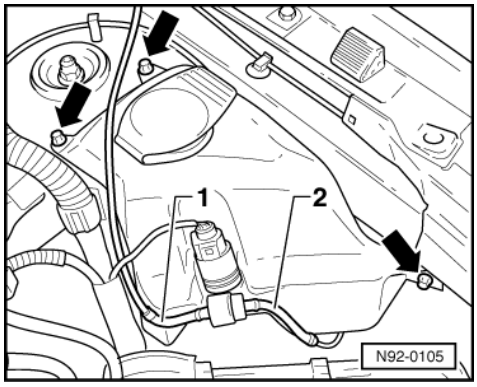


- -> Pull off hose -1- to windscreen washer jets and hose -2- to rear window wash system at pump.
- Pull connector off window washer pump.
- Undo plastic nuts -arrows-.
- Take reservoir out carefully upwards.

# 3 - Rear window wipe/wash system

## 3.1 - Rear window wipe/wash system

Warning!
Before working on the electrical system disconnect the battery earth strap.

*Notes:*

- If the vehicle has a security-coded radio, obtain the correct anti-theft code number before disconnecting the battery.
- When the battery is reconnected, check operation of electrical equipment (radio, clock and electric window lifters) according to Workshop Manual or Owner's Manual.

Protected by copyright. Copying for private or commercial purposes, in part or whole, is not permitted unless authorised by Volkswagen AG. Volkswagen AG does not guarantee or accept any liability with respect to the correctness of information in this document. Copyright by Volkswagen AG.
satelettronica

## 3.2 - Assembly overview: Rear wipe and wash system, vehicles >09.99

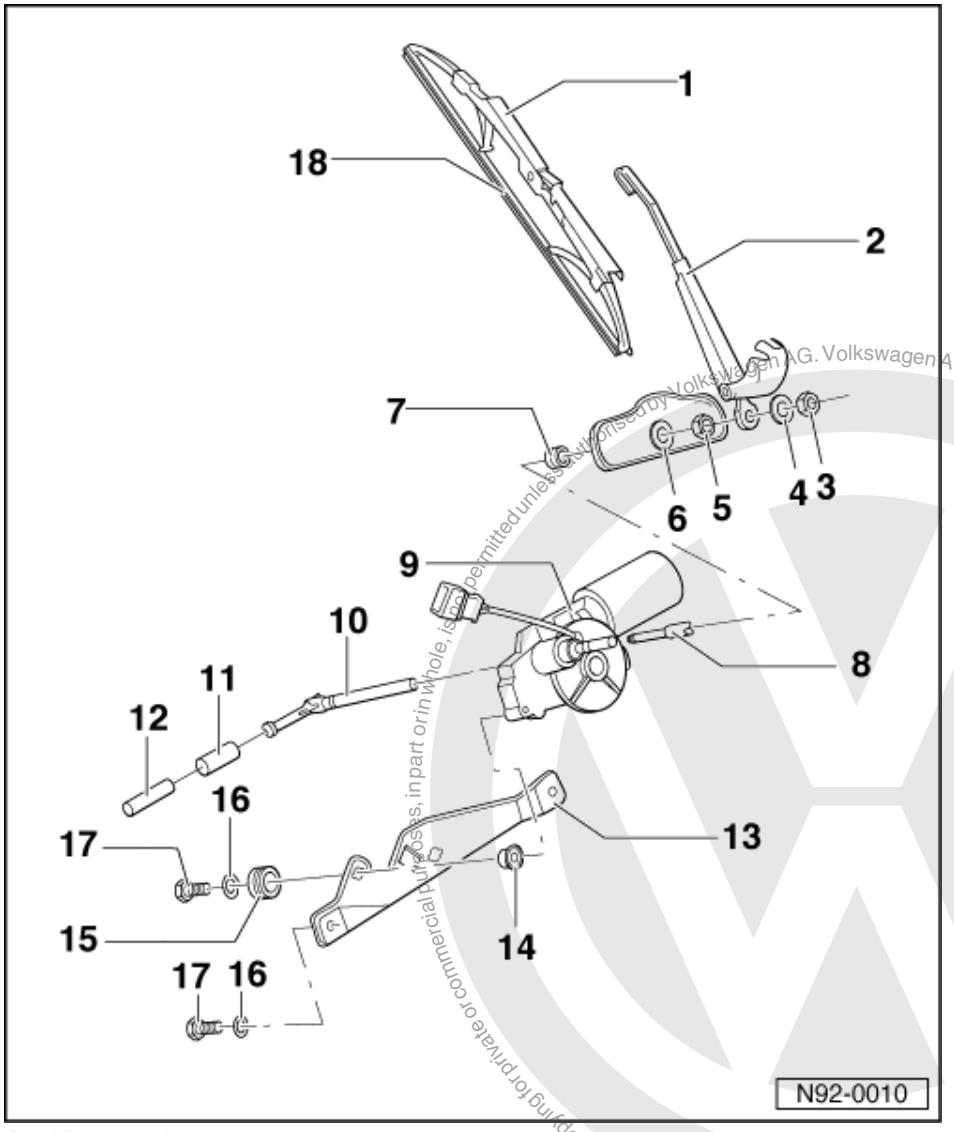


1 Wiper blade
- Adjusting rest position => Page 125

2 Wiper arm

3 Hexagon nut M8
- 15 Nm

4 Washer

5 Hexagon nut M16
- 7 Nm

6 Cover

7 Rubber ring

8 Jet
- Adjusting => Page 126
- Replace with connecting pipe for washer jet.

Protected by copyright. Copying for private or commercial purposes, in part or in whole, is not permitted unless authorised by Volkswagen AG. Volkswagen AG does not guarantee or accept any liability with respect to the correctness of information in this document. Copyright by Volkswagen AG.
satelettronica

Protected by copyright. Copyright by Volkswagen AG. Volkswagen AG does not guarantee or accept any liability with respect to the correctness of information in this document. Copying for private or commercial purposes, in part or in whole, is not permitted unless authorised by Volkswagen AG.

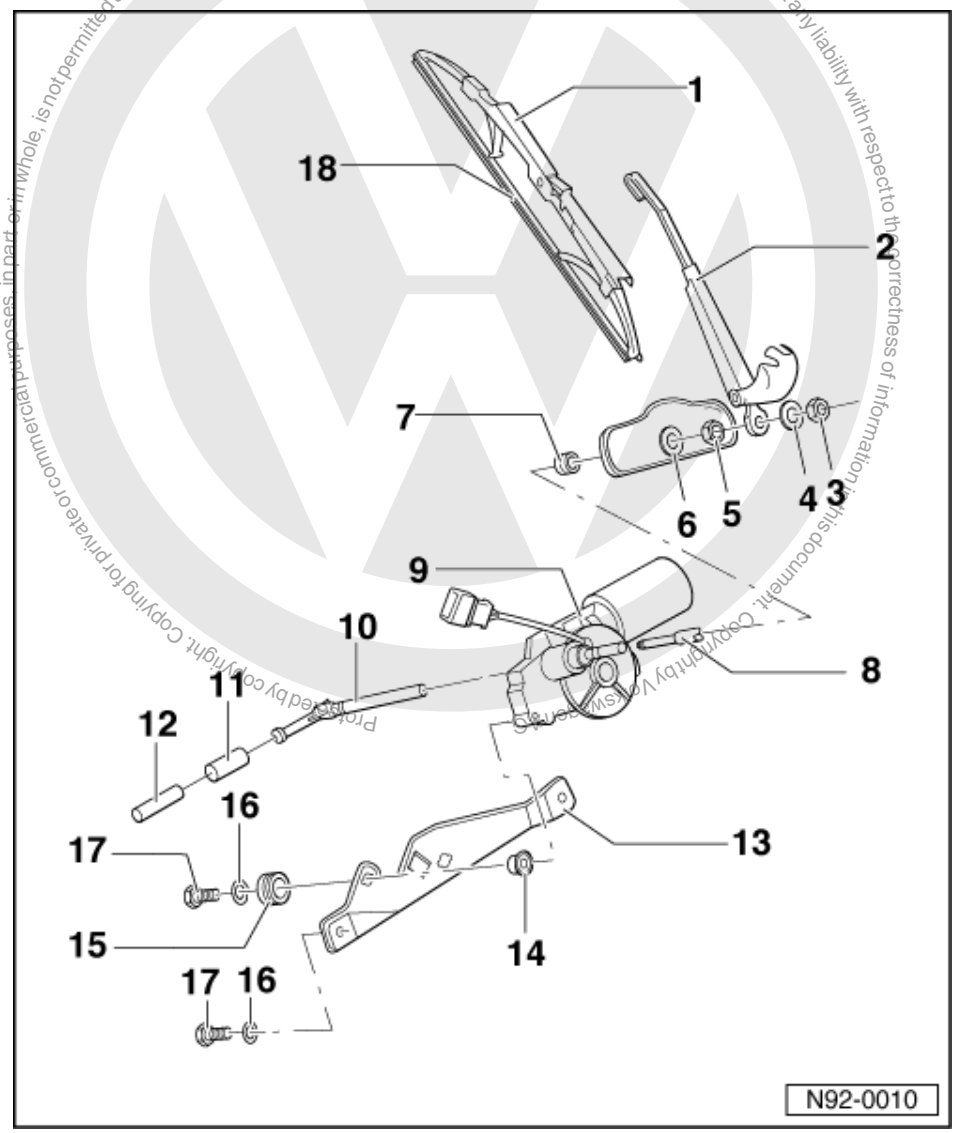


9 Wiper motor
10 Jet connecting pipe
- Replace with washer jet

11 Rubber hose
12 Hose
13 Wiper motor bracket
14 Washer
15 Rubber ring
16 Washer
17 Hexagon bolt M6
- 5 Nm

18 Wiper blade rubber
- Removing and installing wiper blade rubber => Page 114

satelettronica

## 3.3 - Assembly overview: Rear window wipe and wash system, vehicles 10.99 >

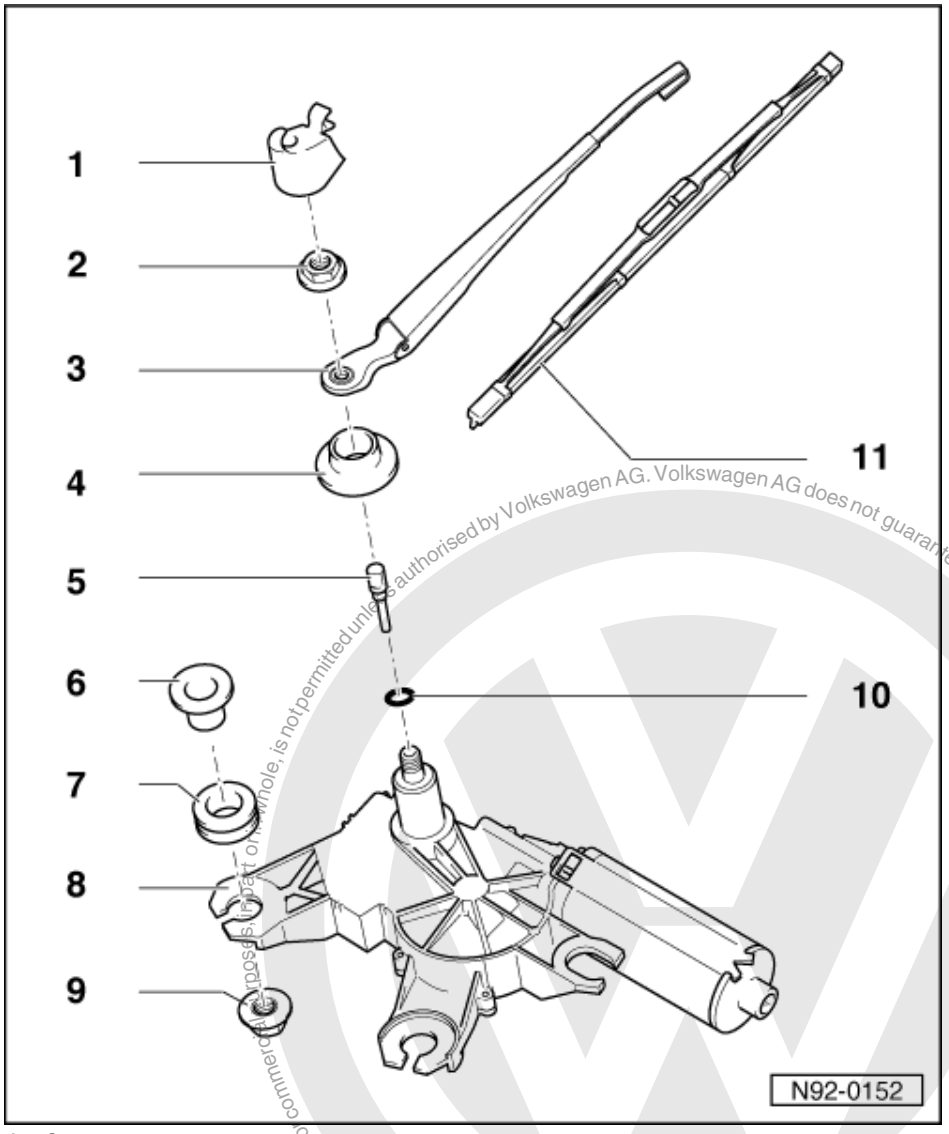


1 Cover cap
2 Hexagon nut 13 mm AF
- 15 Nm

3 Wiper arm
- Adjusting rest position => Page 125

4 Seal
5 Jet
- Adjusting => Page 126
- Renewing => Page 127

Protected by copyright. Copying for private or commercial purposes, in part or in whole, is not permitted unless authorised by Volkswagen AG. Volkswagen AG does not guarantee or accept any liability with respect to the correctness of information in this document. Copyright by Volkswagen AG.
satelettronica

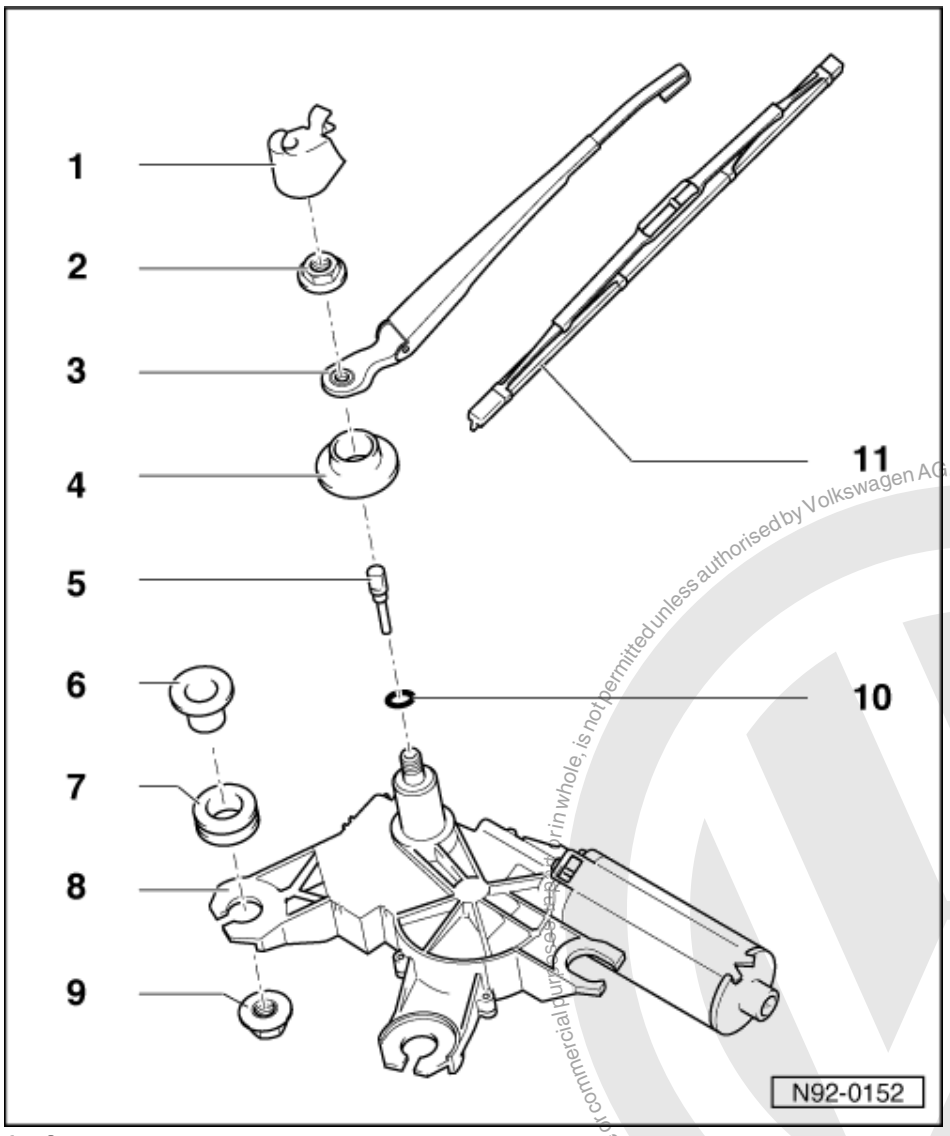


6 Spacer
7 Rubber ring
8 Wiper motor
- Removing => Page 128

9 Hexagon nut M6
- 8 Nm

10 Seal
11 Wiper blade
- Removing and installing wiper blade rubber => Page 114

Protected by copyright. Copying for private or commercial purposes, in part or in whole, is not permitted unless authorised by Volkswagen AG. Volkswagen AG does not guarantee or accept any liability with respect to the correctness of information in this document. Copyright by Volkswagen AG.
satelettronica

## 3.4 - Adjusting rear window wiper rest position, vehicles > 09.99

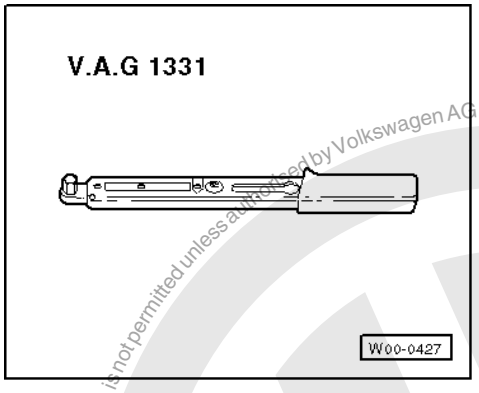


**Special tools, testers, measuring instruments and auxiliary items required**

- V.A.G 1331 Torque wrench (5 - 50 Nm)

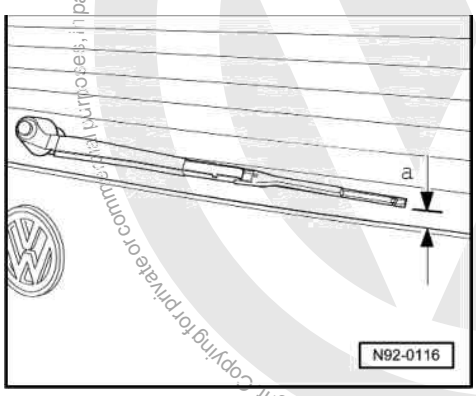


-> The distance -a- between wiper blade and lower edge of window must be 20... 30 mm.

- Adjust park position by moving wiper arm if necessary.

  Wiper arm tightening torque: 15 Nm

## 3.5 - Adjusting rear window wiper rest position, vehicles 10.99 >

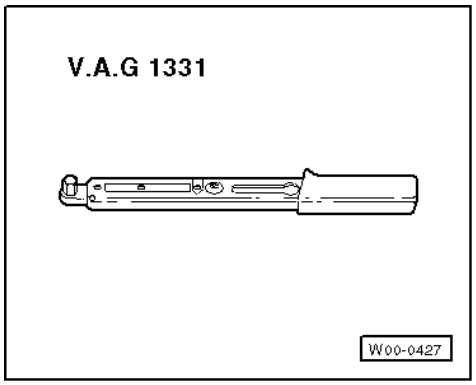


**Special tools, testers, measuring instruments and auxiliary items required**

- V.A.G 1331 Torque wrench (5 - 50 Nm)

Protected by copyright. Copyright by Volkswagen AG. Copying for private or commercial purposes, in part or in whole, is not permitted unless authorised by Volkswagen AG. Volkswagen AG does not guarantee or accept any liability with respect to the correctness of information in this document.
satelettronica

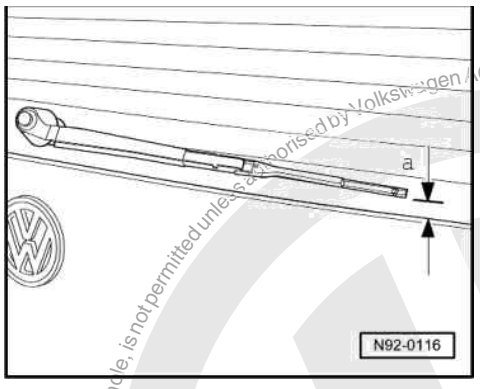


-> The distance -a- between wiper blade and lower edge of window must be 25 mm.

- Adjust park position by moving wiper arm if necessary.

  Wiper arm tightening torque: 15 Nm

## 3.6 - Adjusting washer jets

**Special tools, testers, measuring instruments and auxiliary items required**

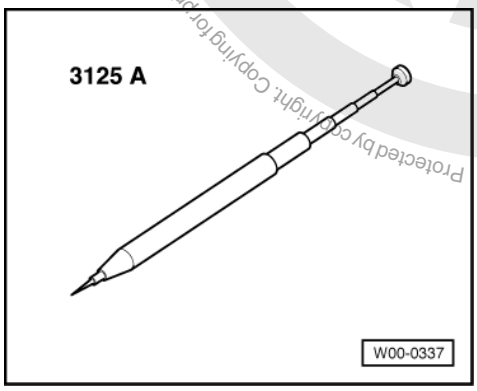


- 3125 A Washer jet adjusting tool

***Notes:***

- Renew washer jet if spray is irregular or cannot be adjusted to centre of wipe area.
- Never use a needle or similar object, as otherwise water passages in spray jets will be damaged!

- Check jet setting.

Rear window jet setting figures:

Spray jet must spray to centre of wiped area.

- Adjust jet with washer jet adjusting tool 3125 A if necessary.

Protected by copyright. Copying for private or commercial purposes, in part or in whole, is not permitted unless authorised by Volkswagen AG. Volkswagen AG does not guarantee or accept any liability with respect to the correctness of information in this document. Copyright by Volkswagen AG.
satelettronica

## 3.7 - Renewing washer jet, vehicles 10.99 >

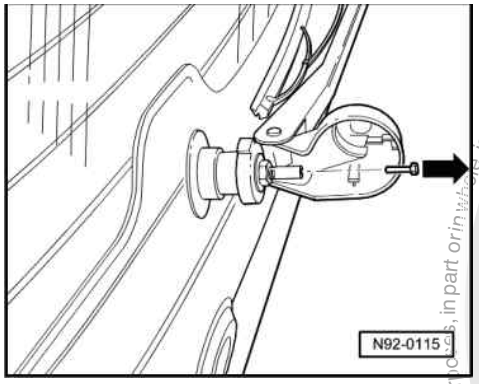


Removing:
- Wiper in park position.
- Fold cap on rear wiper out.
- -> Pull spray jet out carefully in direction of arrow using suitable pliers.

Installing:
- Slide spray jet into wiper arm shaft onto stop with spray jet opening facing vertically upwards.

## 3.8 - Removing rear window wiper, vehicles 10.99 >

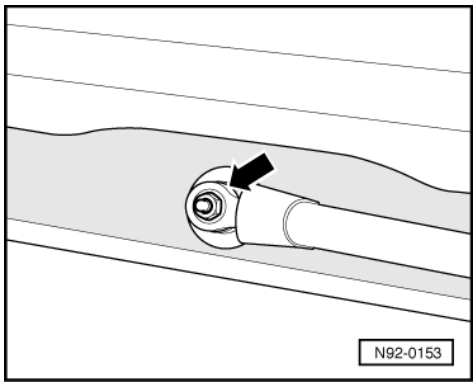


Removing wiper arm
- Open cover cap.
- -> Loosen 13 mm hexagon nut -arrow-.
- Fold up wiper arm and release from taper by moving arm sideways.

- Remove hexagon nut and take wiper arm off.

Remove tailgate trim.

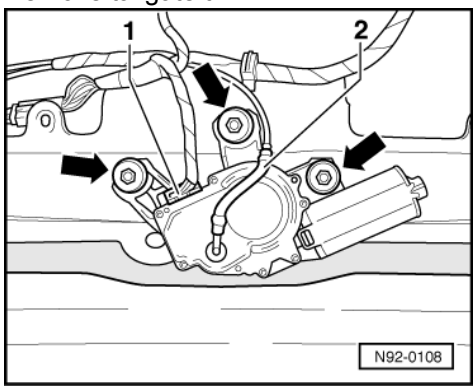


Protected by copyright. Copying for private or commercial purposes, in part or in whole, is not permitted unless authorised by Volkswagen AG. Volkswagen AG does not guarantee or accept any liability with respect to the correctness of information in this document. Copyright by Volkswagen AG.
satelettronica

Protected by copyright. Copying for private or commercial purposes, in part or in whole, is not permitted unless authorised by Volkswagen AG. Volkswagen AG does not guarantee or accept any liability with respect to the correctness of information in this document. Copyright by Volkswagen AG.

### Removing rear wiper motor

- -> Pull connector -1- off wiper motor.
- Pull off hose -2- to spray jets.
- Unbolt 10 mm AF hexagon bolts -arrows- and remove wiper motor.

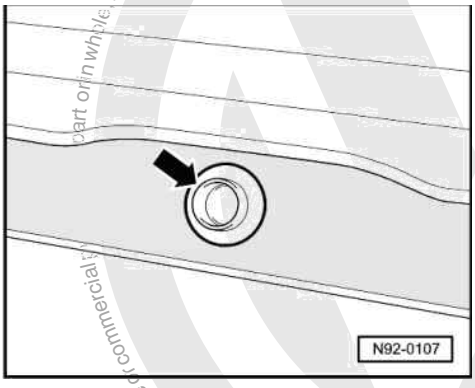


Installation is carried out in the reverse sequence, when doing this note the following:

-> When installing the wiper motor ensure that the seal -arrow- seats in the rear window.

satelettronica

# 4 - Headlight washer system

## 4.1 - Headlight washer system

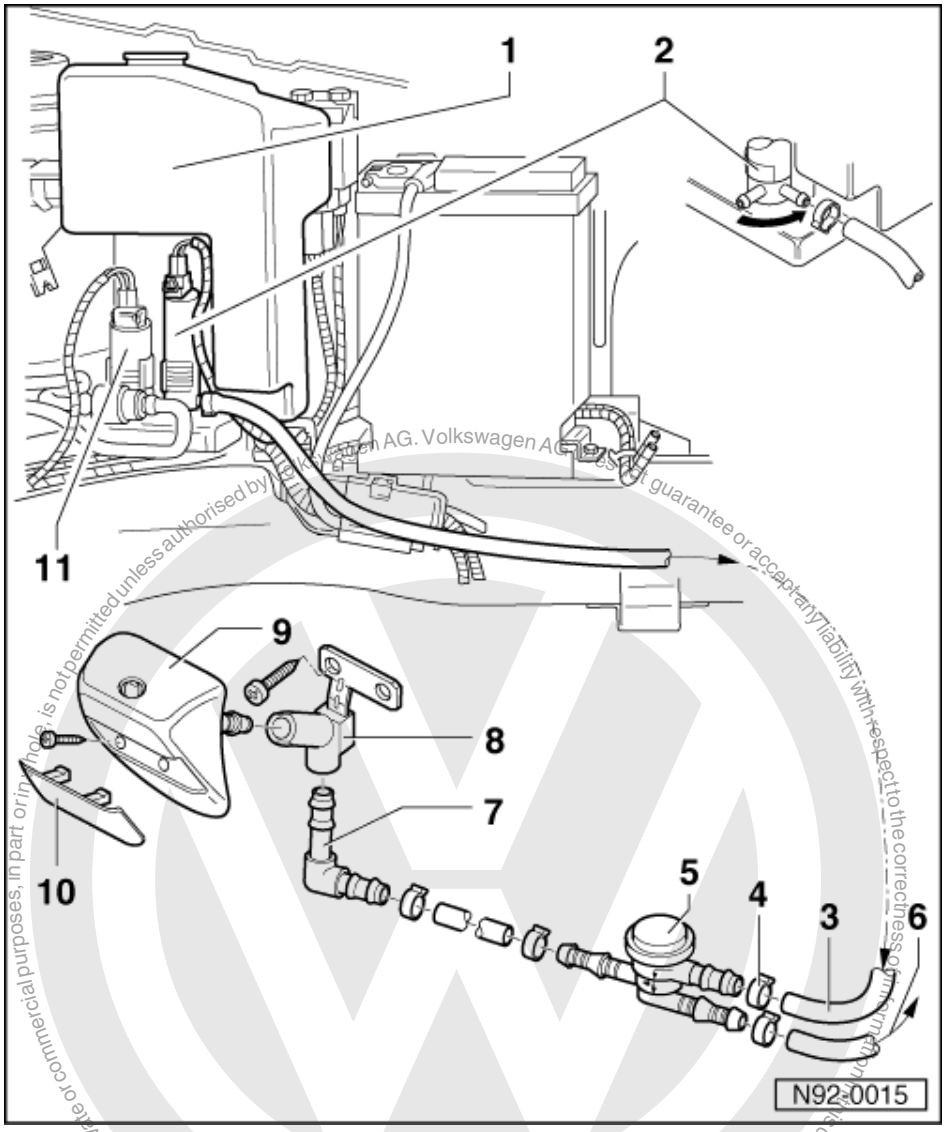


## 4.2 - Assembly overview: Headlight washer system, vehicles > 09.99

1 Fluid reservoir
- Capacity 7 ltr.
- Two-part, connected together

2 Headlight washer pump
- Removing: turn in direction of arrow and pull

3 Hose 10 x 3

4 Clamp

5 Back-pressure valve
- Observe arrows for hose connections
- Secured to cross member front left with clamp

satelettronica

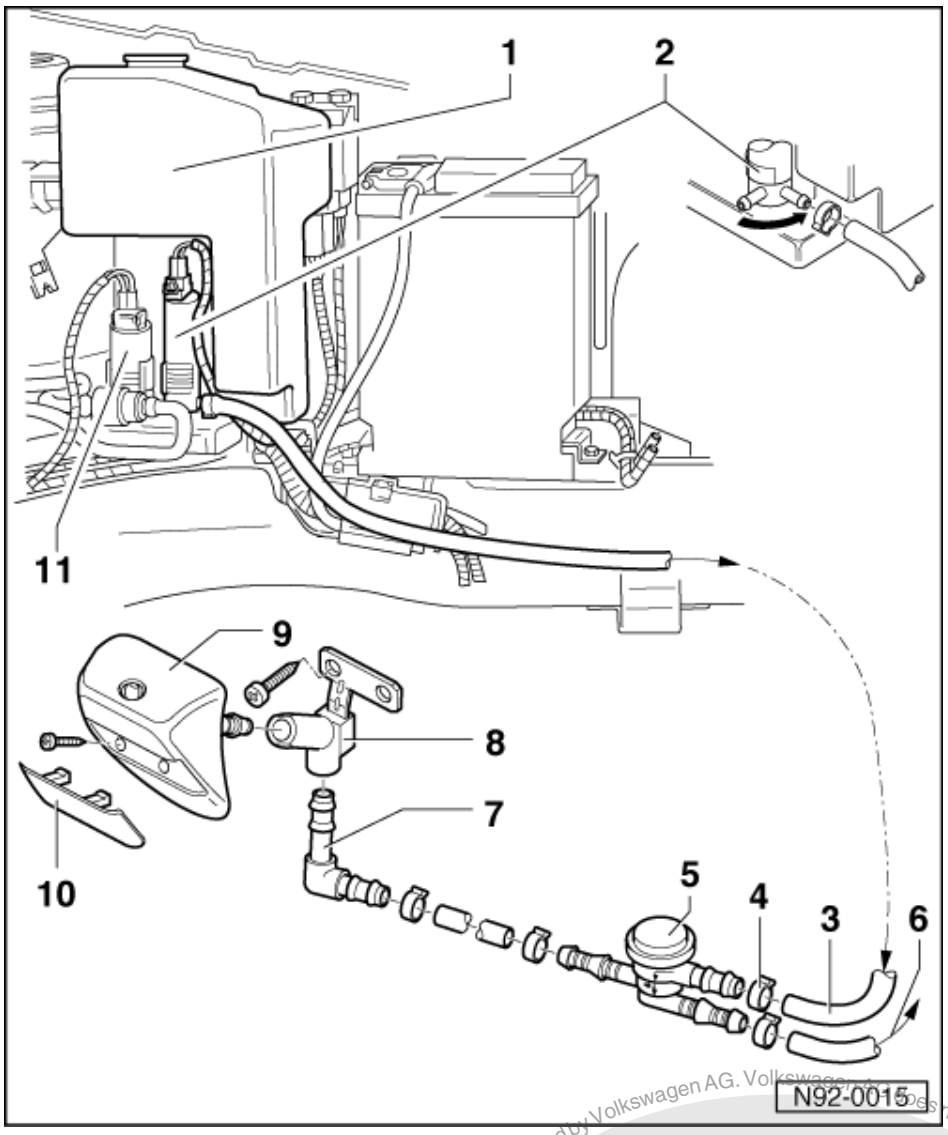


6 To right spray jet
7 Angled connector
8 Connector
9 Jets
- Adjusting => Page 133

10 Cap
11 Windscreen washer pump

satelettronica

Protected by copyright. Copying for private or commercial purposes, in part or in whole, is not permitted unless authorised by Volkswagen AG. Volkswagen AG does not guarantee or accept any liability with respect to the correctness of information in this document. Copyright by Volkswagen AG.

## 4.3 - Assembly overview: Headlight washer system, vehicles 10.99 >

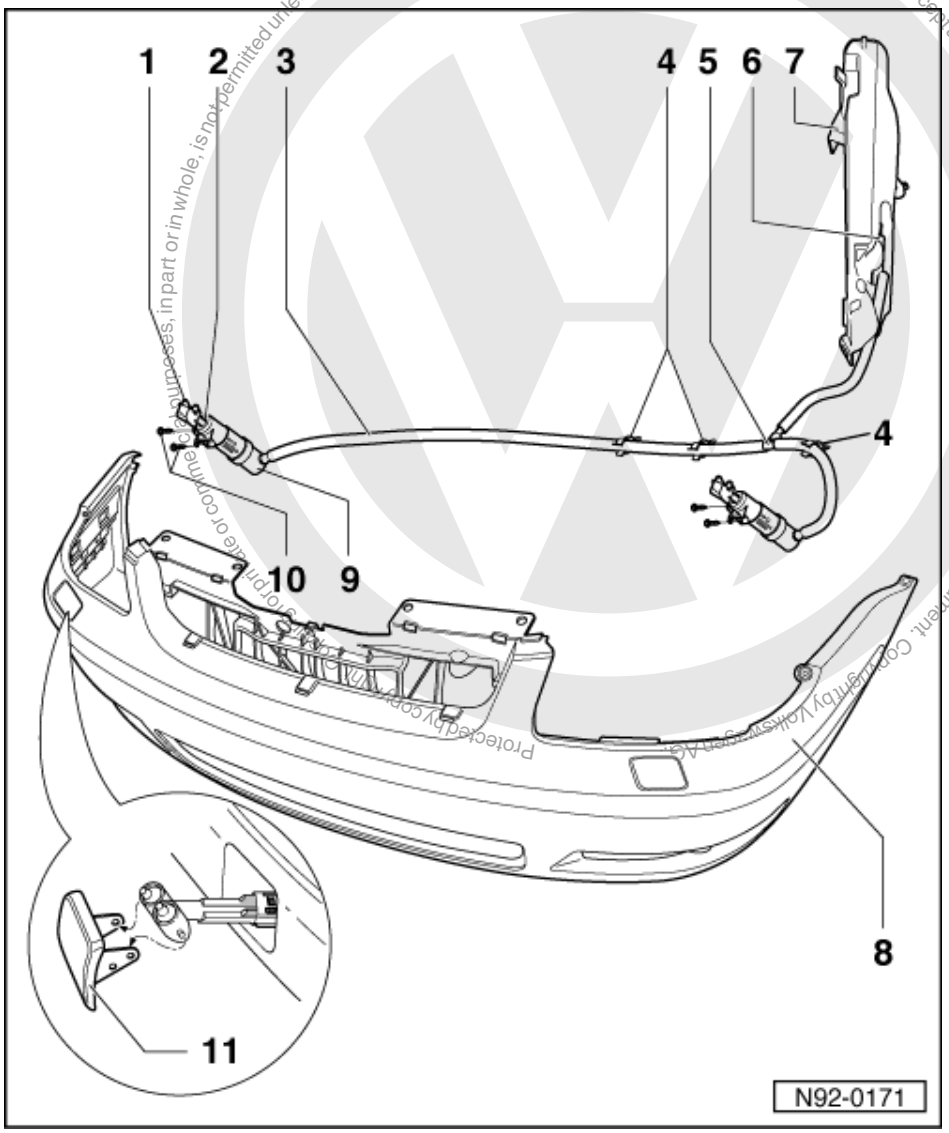


1 Spray jets
- Adjusting => Page 133

2 Spray jet retainer
- Removing and installing =>Page 134

3 Hose 10 x 3
4 Securing clip
5 Distributor
6 Headlight washer pump

satelettronica

Protected by copyright. Copyright by Volkswagen AG. Volkswagen AG does not guarantee or accept any liability with respect to the correctness of information in this document. Copyright by Volkswagen AG. Commercial use is not permitted unless authorised by Volkswagen AG, in part or in whole, is not permitted unless authorised by Volkswagen AG.

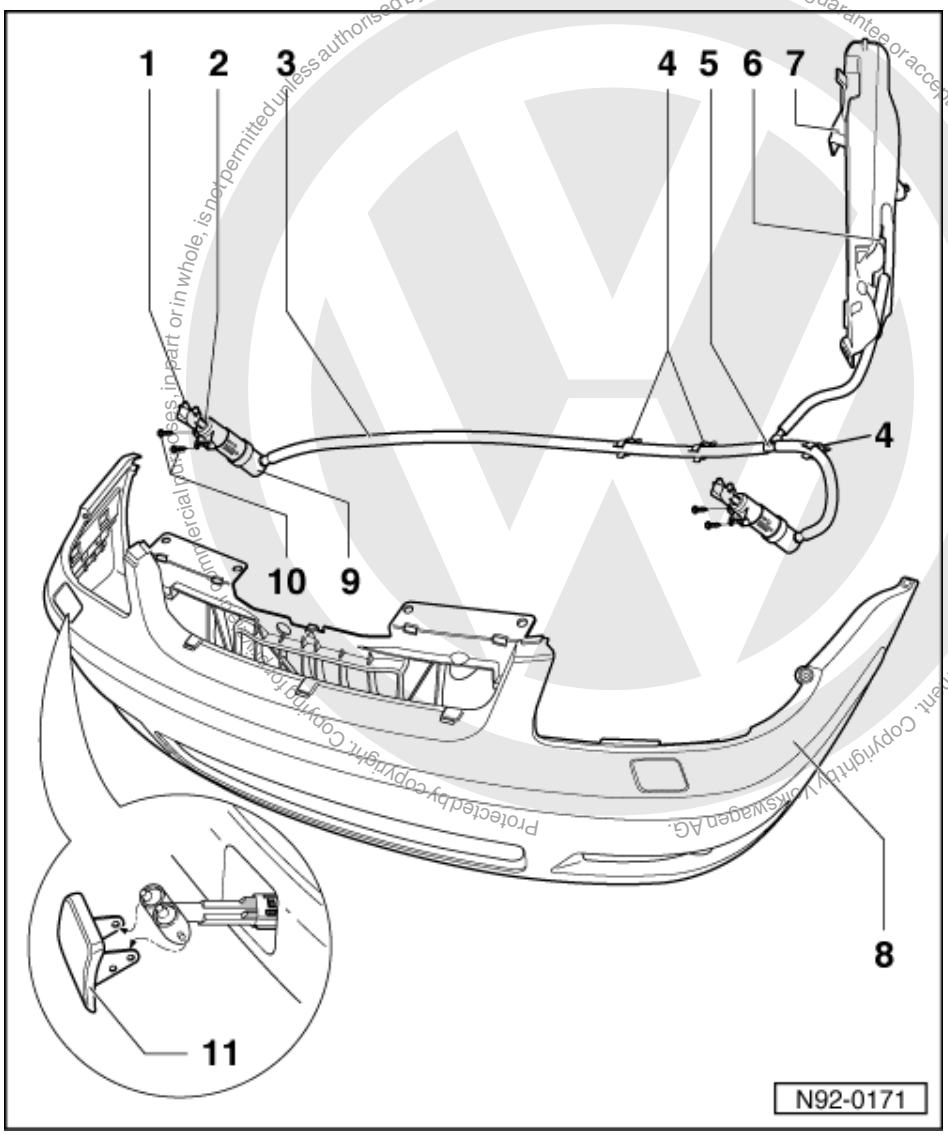


7 Window washer system and headlight washer system reservoir
- Under left wing
- Removing and installing
  =>Page 135

8 Front bumper

9 Washer jet lift cylinder
- Removing and installing
  =>Page 135

10 Self-tapping screw

11 Cap

satelettronica

## 4.4 - Adjusting washer jets, vehicles > 09.99

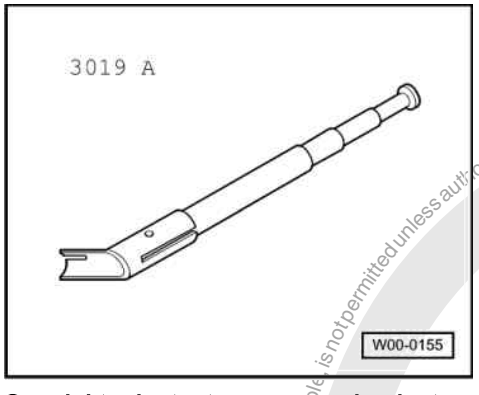


**Special tools, testers, measuring instruments and auxiliary items required**

- 3019 A Adjusting tool

Carry out work sequence as follows:

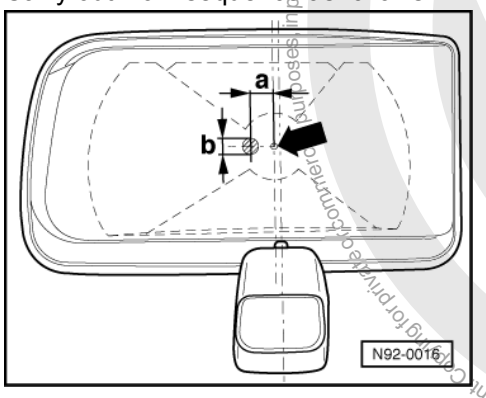


-> The following jet setting figures are for the left-hand headlight (right-hand mirror image).

- Check jet settings.

| | |
|---|---|
| a | 15 mm from casting point (arrow) |
| b | 10 mm diameter |

- Adjust jet with adjusting device 3019 A if necessary.

***Note:***
*If jet of water is irregular or cannot be adjusted to prescribed figures, then renew jet (repair measure).*

## 4.5 - Adjusting washer jets, vehicles 10.99 >

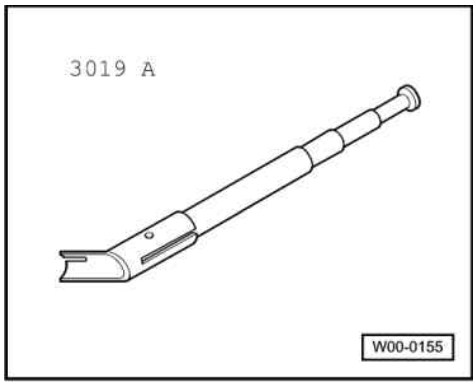


Protected by copyright. Copying for private or commercial purposes, in part or in whole, is not permitted unless authorised by Volkswagen AG. Volkswagen AG does not guarantee or accept any liability with respect to the correctness of information in this document. Copyright by Volkswagen AG.
satelettronica

Special tools, testers, measuring instruments and auxiliary items required

- 3019 A Adjusting tool

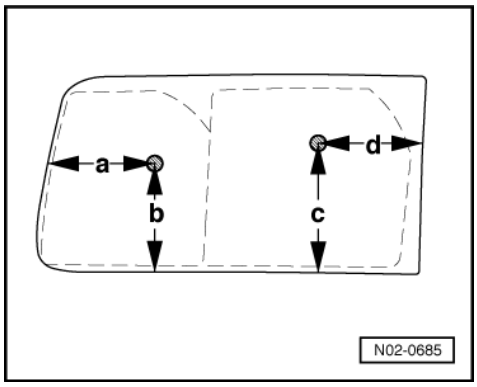


-> Jet adjustment dimensions for the left headlight
(right headlight is a mirror-image):

a - 70 mm
b - 75 mm
c - 90 mm
d - 75 mm

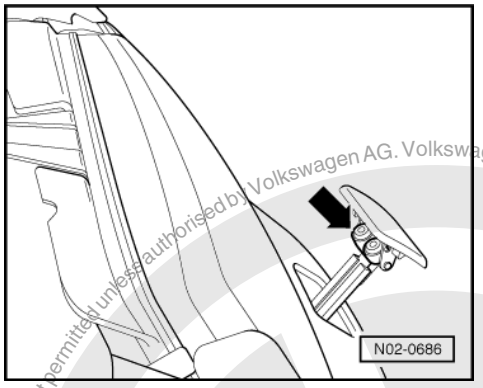


- If necessary, adjust jets as follows:
- -> Pull spray jet -arrow- out onto stop with adjusting tool 3019 A and adjust to relevant spray point.

***Note:***

*If spray is irregular or it cannot be adjusted to prescribed dimensions, renew spray jet or spray jet bracket.*

## 4.6 - Removing and installing spray jet retainer, vehicles 10.99 >

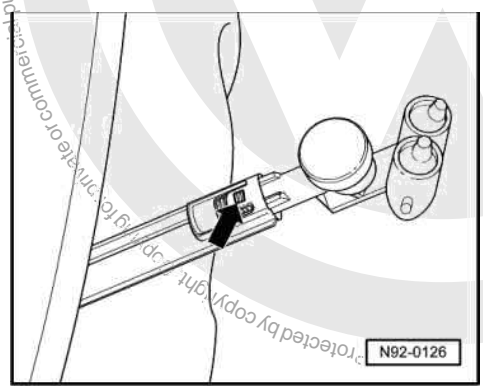


Protected by copyright. Copying for private or commercial purposes, in part or in whole, is not permitted unless authorised by Volkswagen AG. Volkswagen AG does not guarantee or accept any liability with respect to the correctness of information in this document. Copyright by Volkswagen AG.
satelettronica

*Note:*

*The spray jet retainer can also be removed and installed with bumper installed.*

Removing:

- Carefully pull spray jet retainer out and hold.
- -> Lift securing clip -arrow- slightly with a small screwdriver.
- Pull spray jet retainer out.

Installing:

- Slide spray jet retainer into lift cylinder until it engages.
- Adjust spray jets =>Page 133 .

## 4.7 - Removing and installing washer jet lift cylinder, vehicles 10.99 >

Removing:

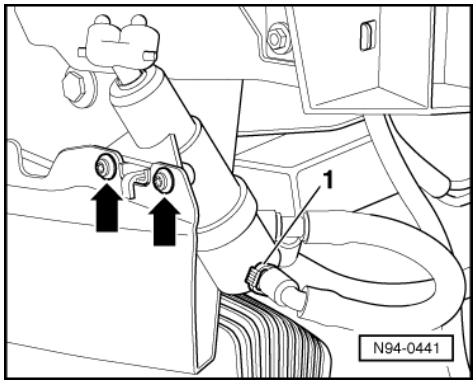


- Remove bumper

=> General body repairs, exterior, Repair group 63

- -> Unscrew both screws -arrow- on lift cylinder.
- Pull out securing clip -1- on hose connection.
- Pull hose off lift cylinder.

Installing:

Install in reverse order.

- Adjust spray jets =>Page 133 .

## 4.8 - Removing headlight washer system reservoir, vehicles 10.99 >

Removing:

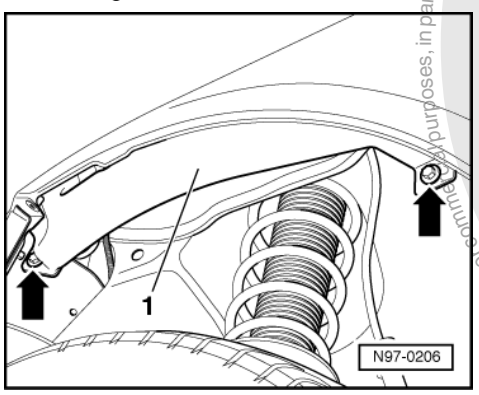


satelettronica
Protected by copyright. Copying for private or commercial purposes, in part or in whole, is not permitted unless authorised by Volkswagen AG. Volkswagen AG does not guarantee or accept any liability with respect to the correctness of information in this document. Copyright by Volkswagen AG.

- Removing headlight washer system reservoir => Page 120 .
- Remove left wheel housing liner.

=> General body repairs, exterior; Repair group 66; Removing and installing wheel housing liner Removing and installing wheel housing liner

- Remove left side turn signal => Page 164 .
- -> Unscrew plastic nuts -arrows- and carefully remove reservoir -1- downwards.

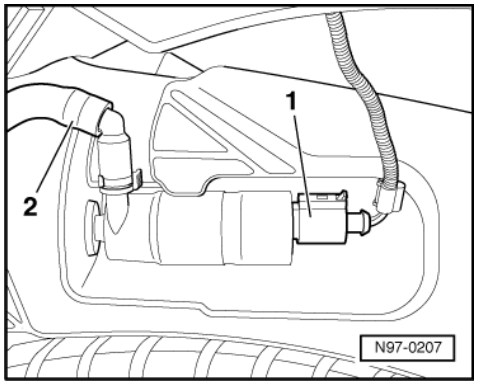


- -> Separate connector -1- and pipe -2- from headlight washer system pump and remove reservoir.

**Installing:**

Install in reverse order.

satelettronica

Protected by copyright. Copying for private or commercial purposes, in part or in whole, is not permitted unless authorised by Volkswagen AG. Volkswagen AG does not guarantee or accept any liability with respect to the correctness of information in this document. Copyright by Volkswagen AG.

# 94 - Lights, Lamps, Switches - exterior

## 1 - Headlight

### 1.1 - Headlight

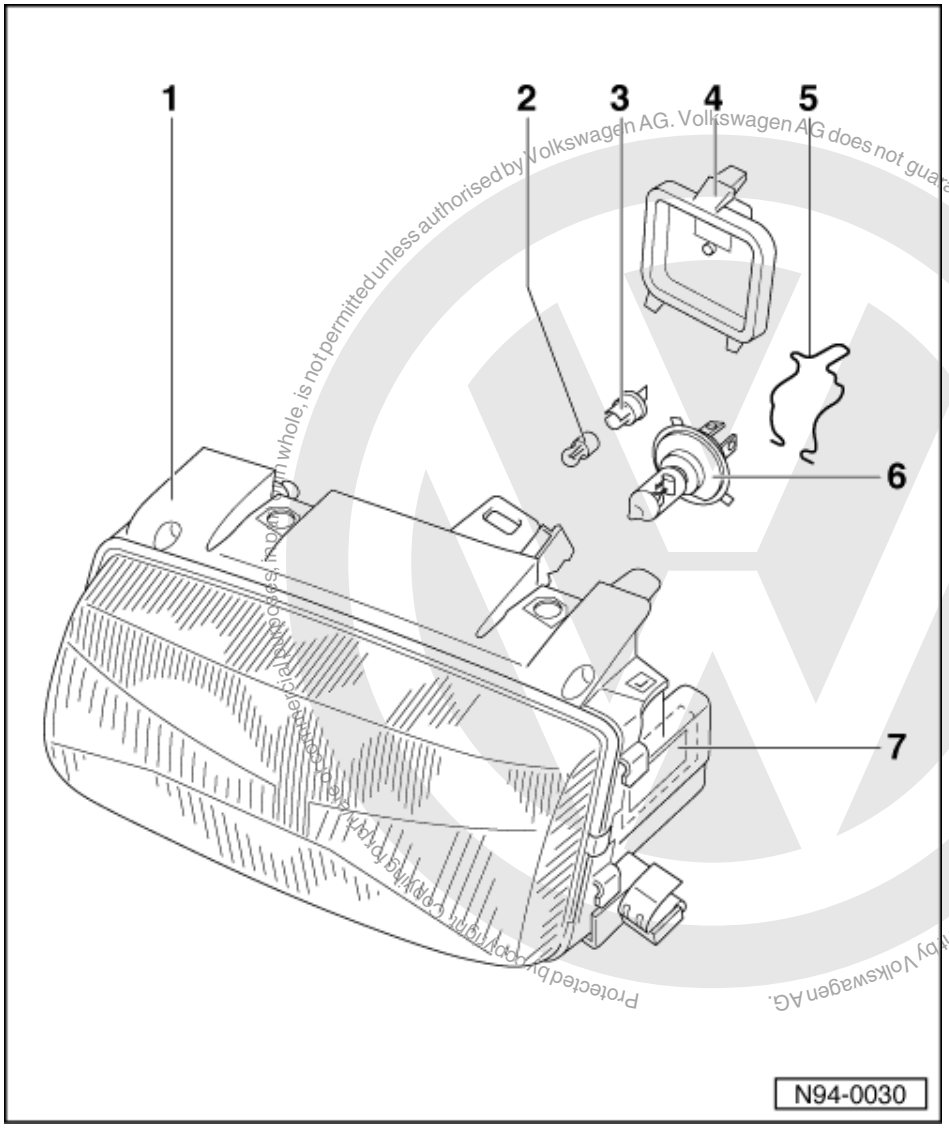


### 1.2 - Assembly overview: Headlight, vehicles > 09.99

| |
|---|
| Warning!<br>Always disconnect the battery earth strap before working on the electrical system. |

*Note:*

Protected by copyright. Copying for private or commercial purposes, in part or in whole, is not permitted unless authorised by Volkswagen AG. Volkswagen AG does not guarantee or accept any liability with respect to the correctness of information in this document. Copyright by Volkswagen AG.
satelettronica

*After any measures which could affect the headlight setting, the headlight setting must be checked and if necessary adjusted => Page 143 .*

1 **Headlight**
- Checking headlight adjustment => Page 143
- Removing and installing => Page 145

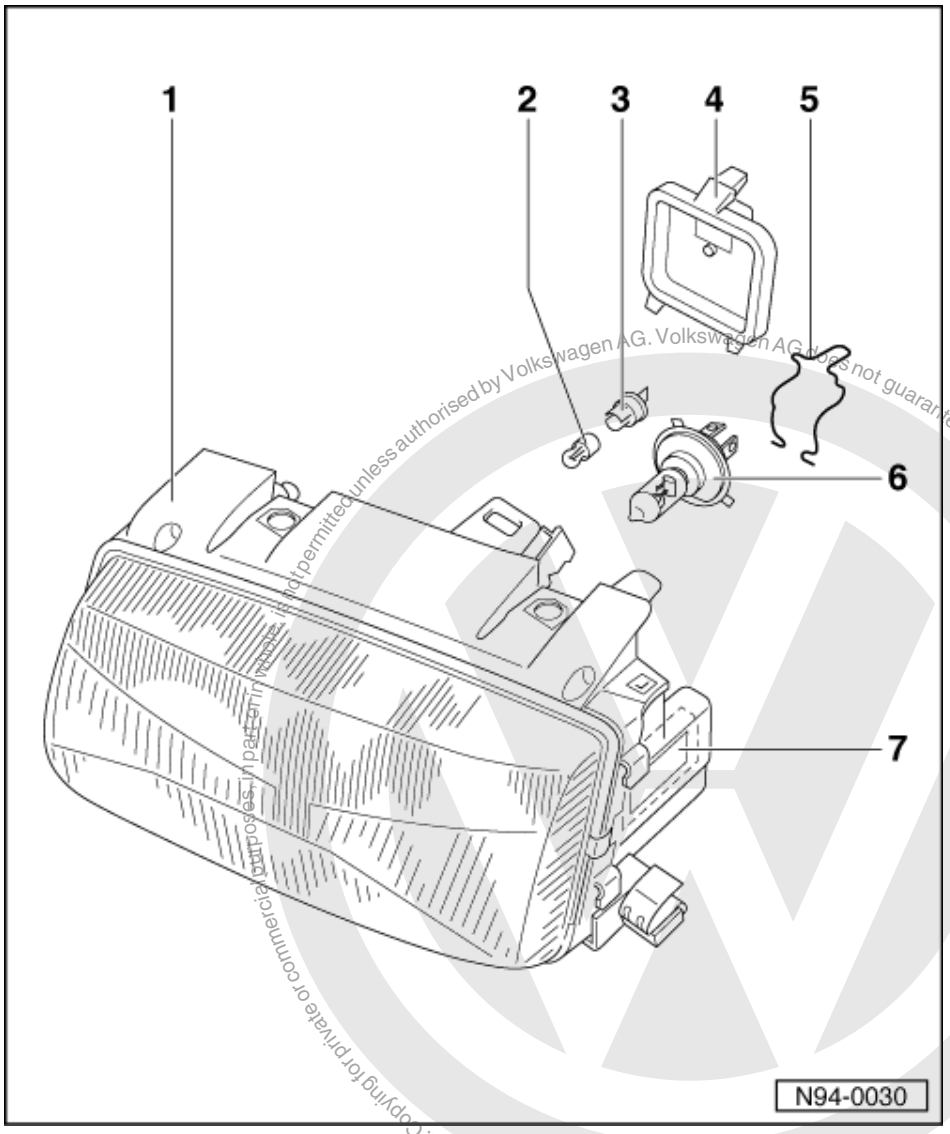


2 **Side light bulb**
Bulb 12 V, 4 W
- Renewing => Page 146

3 **Side light bulb holder**

4 **Cap**

5 **Spring clip**

6 **Twin filament bulb for main and dipped beams**
Bulb H4 12 V, 60 W/55 W
- Renewing => Page 147

7 **Headlight beam range control positioning motor**
The positioning motor is integrated in the headlight unit.

Protected by copyright. Copying for private or commercial purposes, in part or in whole, is not permitted unless authorised by Volkswagen AG. Volkswagen AG does not guarantee or accept any liability with respect to the correctness of information in this document. Copyright by Volkswagen AG.
satelettronica

## 1.3 - Assembly overview: Headlight, vehicles 10.99 >

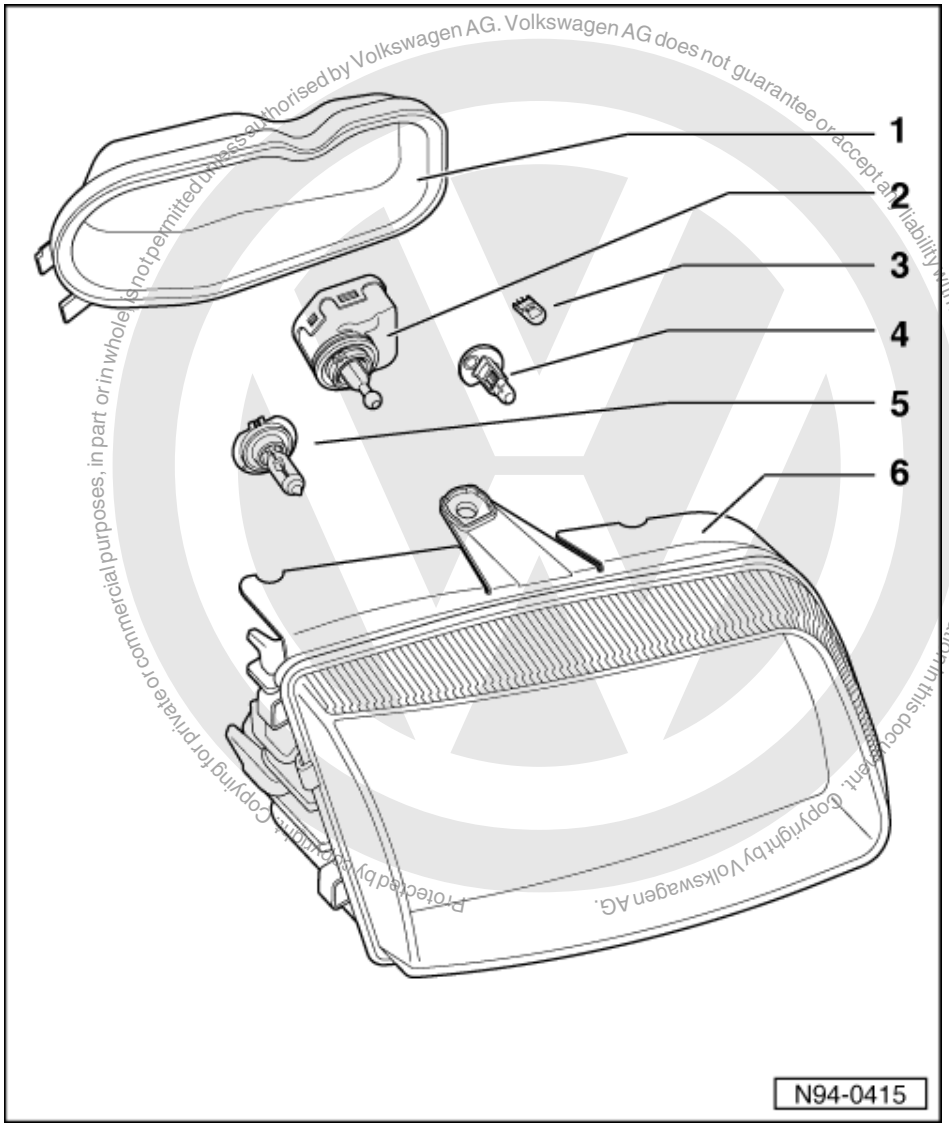


Copyright by Volkswagen AG. Protected by copyright. Copying for private or commercial purposes, in part or in whole, is not permitted unless authorised by Volkswagen AG. Volkswagen AG does not guarantee or accept any liability with respect to the correctness of information in this document.

Headlights with gas discharge bulbs => Page 141 .

Warning!
Always disconnect the battery earth strap before working on the electrical system.

***Note:***

*After any measures which could affect the headlight setting, the headlight setting must be checked and if necessary adjusted => Page 144 .*

1 Cover cap
2 Headlight beam range control positioning motor
- Removing and installing => Page 152

satelettronica

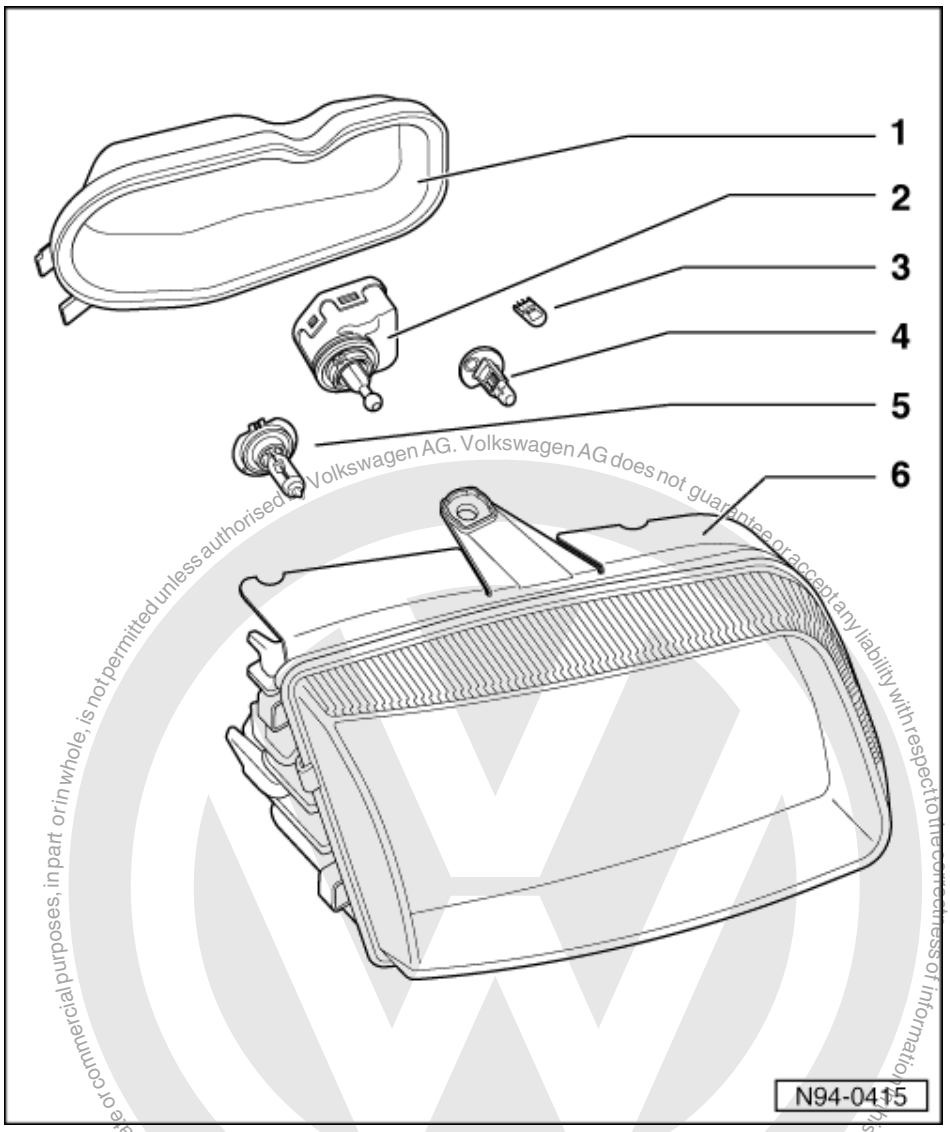


Protected by Copyright. Copying for private or commercial purposes, in part or in whole, is not permitted unless authorised by Volkswagen AG. Volkswagen AG does not guarantee or accept any liability with respect to the correctness of information in this document. Copyright by Volkswagen AG.

3 **Side light bulb**
Bulb 12 V, 5 W
- Renewing => Page 147

4 **Main beam bulb**
Bulb H1, 12 V, 55 W
- Renewing => Page 147

5 **Dipped beam bulb**
Bulb H7, 12 V, 55 W
- Renewing => Page 147

6 **Headlight**
- Checking headlight adjustment => Page 144
- Removing and installing => Page 145

satelettronica

## 1.4 - Assembly overview: Headlights with gas discharge bulbs, vehicles 10.99 >

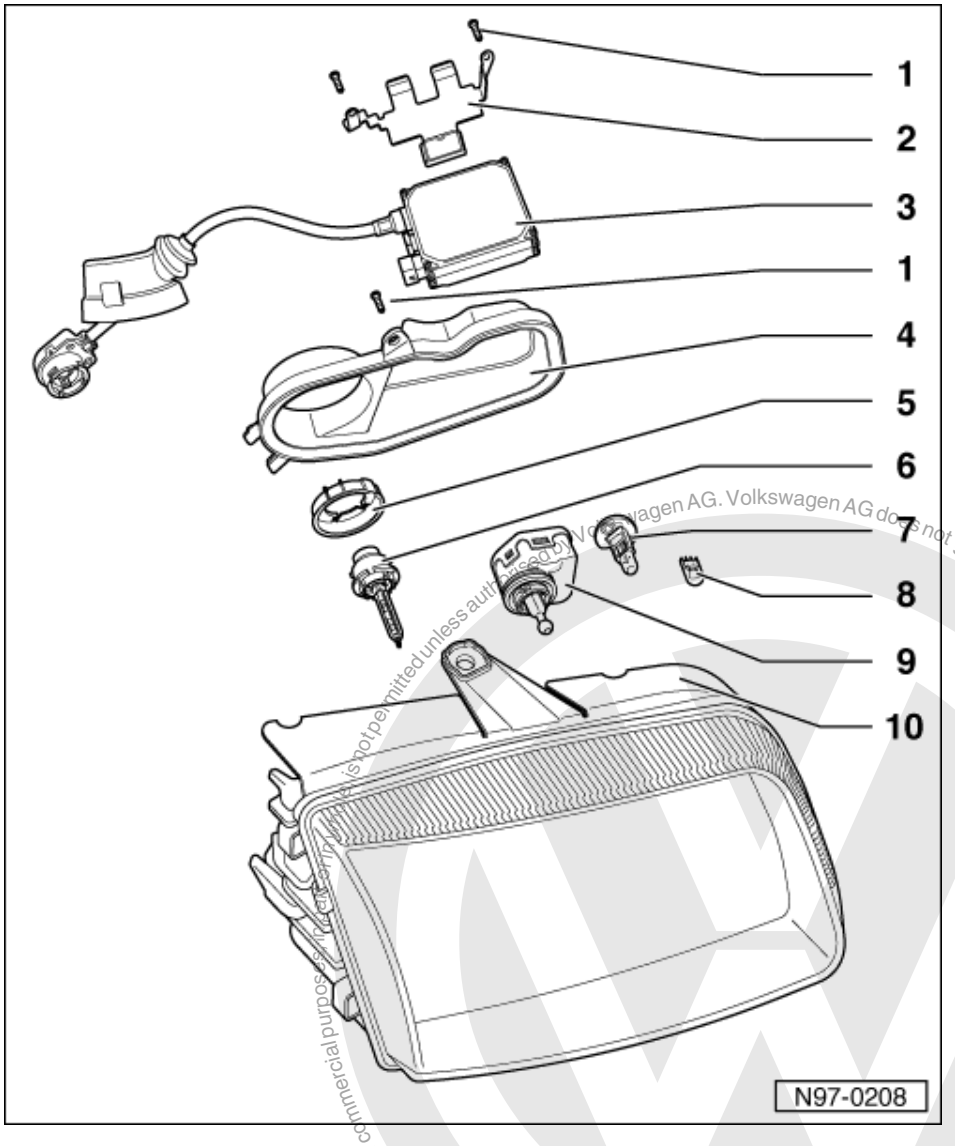


Warning!
Always disconnect the battery earth strap before working on parts of gas discharge headlight marked with yellow high voltage symbols.

*Notes:*

- After any measures which could affect the headlight setting, the headlight setting must be checked and if necessary adjusted => Page 144 .
- The headlight beam range control has a self-diagnosis feature.

=> Repair group 01

1 Cross-head screws

satelettronica

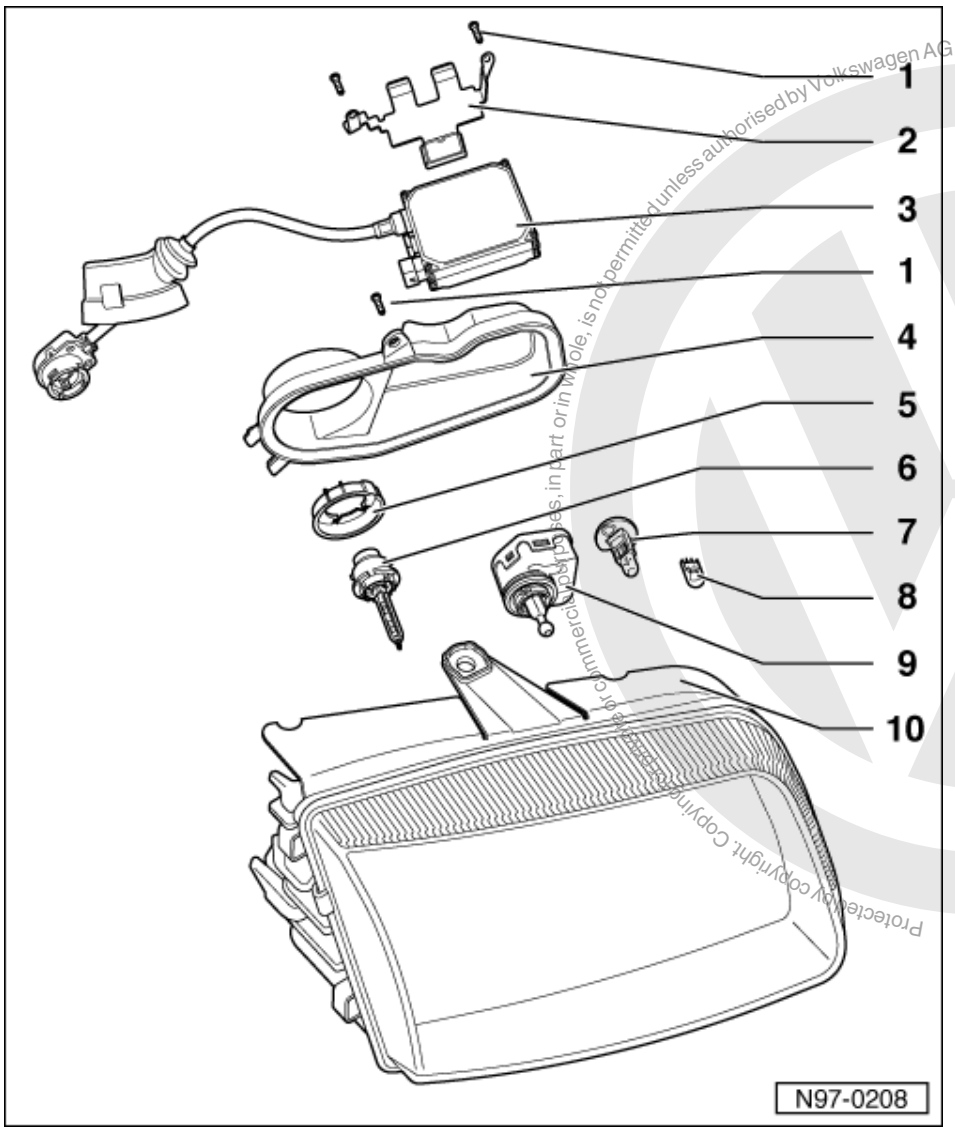


Protected by copyright. Copying for commercial purposes, in part or in whole, is not permitted unless authorised by Volkswagen AG. Volkswagen AG does not guarantee or accept any liability with respect to the correctness of information in this document. Copyright by Volkswagen AG.
satelettronica

2 Retaining frame
- For gas discharge bulb control unit

3 Gas discharge bulb control unit
- Removing and installing => Page 155

4 Cover cap

5 Retaining ring

6 Dipped headlight gas discharge bulb
- 55 W
- Renewing => Page 149

7 Main beam bulb
  Bulb H1, 12 V, 55 W
- Renewing => Page 151

8 Side light bulb
  Bulb 12 V, 5 W
- Renewing => Page 152

Protected by copyright. Copying for private or commercial purposes, in part or in whole, is not permitted unless authorised by Volkswagen AG. Volkswagen AG does not guarantee or accept any liability with respect to the correctness of information in this document.

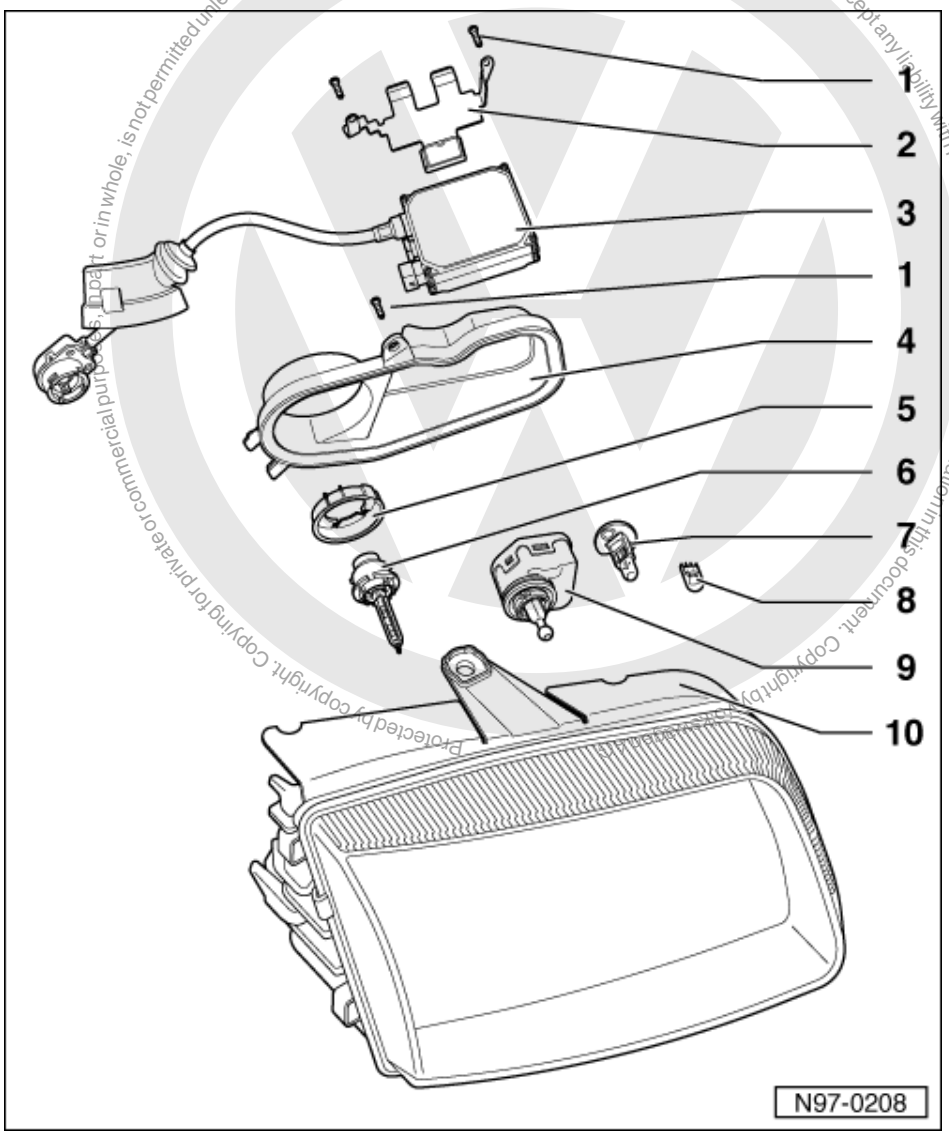


9 Headlight beam range control positioning motor
- Removing and installing => Page 154

10 Headlight
- Checking headlight adjustment => Page 144
- Removing and installing => Page 145

## 1.5 - Adjusting headlight, vehicles > 09.99

*Notes:*

*Use headlight adjusting equipment when adjusting the headlights. The specifications can be found in the Maintenance Manual.*

satelettronica

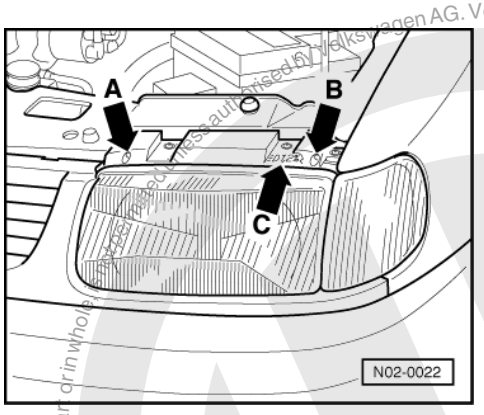


-> Headlight (left):

A - Lateral adjustment
B - Height adjustment

- Adjust headlights, from the front, using a suitable cross slotted screwdriver.

Both adjustment screws on right-hand headlight are a mirror image.

***Note:***

*Please check also that both headlights move evenly when operating the headlight range control.*

## 1.6 - Adjusting headlights, vehicles 10.99 >

***Notes:***

- In order to adjust headlights on vehicles with gas discharge bulbs, a basic setting must be performed.

=> Repair group 01

- Use headlight adjusting equipment when adjusting headlights. The specifications can be found in the Maintenance Manual.

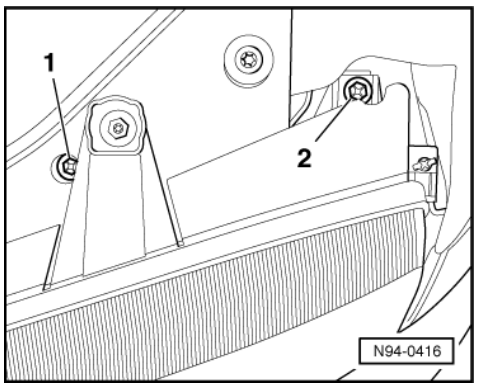


-> Left headlight (adjustment screws for right headlight are a mirror image):

1 - Height adjustment
2 - Lateral adjustment

- Adjust headlights, from the front, using a suitable cross slotted screwdriver.

Copyright by Volkswagen AG. Volkswagen AG does not guarantee or accept any liability with respect to the correctness of information in this document. Copyright by Volkswagen AG. Protected by copyright. Copying for private or commercial purposes, in part or in whole, is not permitted unless authorised by Volkswagen AG.
satelettronica

Both adjustment screws on right-hand headlight are a mirror image.

***Note:***

*Please check also that both headlights move evenly when operating the headlight range control.*

## 1.7 - Removing and installing headlights, vehicles >09.99

- Remove turn signals => Page 161 .
- Remove radiator grille and radiator grille trim.
- Disconnect headlight multi-pin connectors.

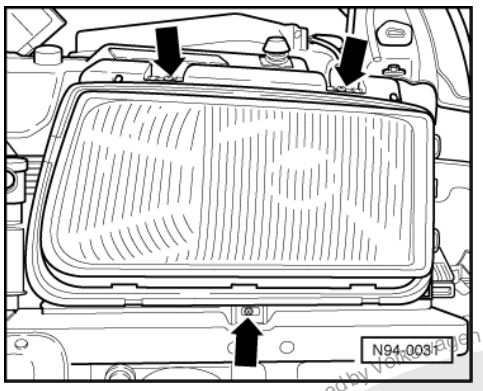


- -> Remove securing screws -arrows-.
- Carefully place a hammer shaft between headlight housing and bumper, push headlight housing upwards slightly with hammer shaft.
- Pull headlight housing out forwards.

***Note:***

*The lower screw is secured in position with a clip.*

Installation is carried out in the reverse sequence.

- Check headlight settings => Page 143 .

## 1.8 - Removing and installing headlights, vehicles 10.99 >

- Remove turn signals => Page 162 .
- Remove radiator grille:

- Separate connectors on fog lights.
- Remove front bumper.

=> General body repairs, exterior; Repair group 63; Bumpers; Front bumper Bumpers Front bumper

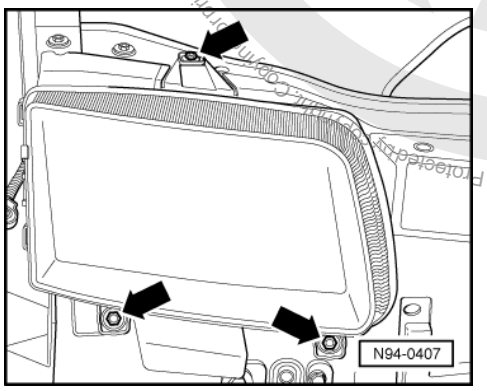


satelettronica

- -> Remove securing screws -arrows-.
- Pull headlight out forwards carefully. Separate multi-pin connector and remove headlight forwards.

Installation is carried out in the reverse sequence, when doing this note the following:

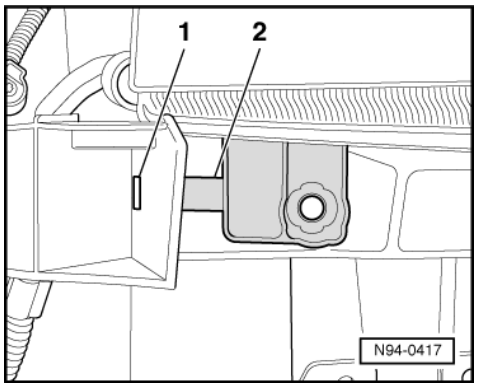


*Note:*

*-> The guide mortise -2- must be located in slot -1-.*

- Install radiator grille:

- Install front bumper.

=> General body repairs, exterior; Repair group 63; Bumpers; Front bumper Bumpers Front bumper

- Check headlight settings => Page 144 .

## 1.9 - Replacing headlight bulb, vehicles > 09.99

*Note:*

*Do not touch bulb glass when fitting a new bulb. Fingers leave traces of grease on the glass, which when switching bulb on, evaporate and cause the glass to cloud over.*

### Replacing side light bulb

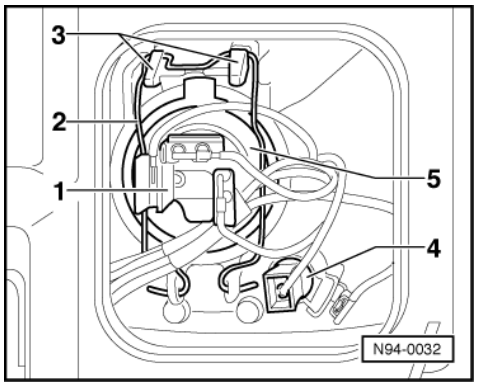


- Release cover on rear of headlight housing and remove.
- Pull holder -4- with bulb on connector out of the reflector.
- After changing bulb, push bulb with holder fully into the reflector.
- Install cover on rear of headlight housing.
- After installing a new bulb check function of headlight.

Protected by copyright. Copying for private or commercial purposes, in part or in whole, is not permitted unless authorised by Volkswagen AG. Volkswagen AG does not guarantee or accept any liability with respect to the correctness of information in this document. Copyright by Volkswagen AG.
satelettronica

Renewing dip and main beam bulb

- Release cover on rear of headlight housing and remove.

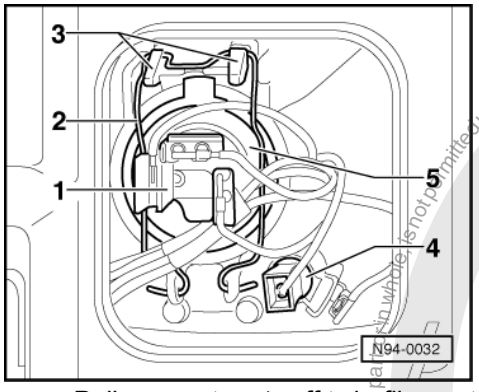


- -> Pull connector -1- off twin-filament bulb.
- Push retaining clip -2- over the lugs -3- and allow to hang down.
- Pull twin-filament bulb -5- out of reflector.
- Do not touch bulb glass.
- Insert new bulb so that the lugs on the laminated plate align with the grooves in the reflector.
- Install cover on rear of headlight housing.
- After installing a new bulb check function of headlight.

## 1.10 - Replacing headlight bulb, vehicles 10.99 >

Replacing headlight bulb with gas discharge=> Page 149 .

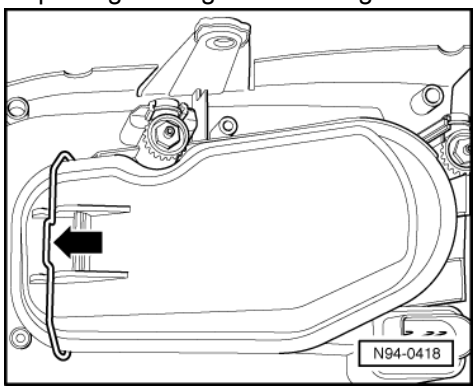


*Note:*
*Do not touch bulb glass when fitting a new bulb. Fingers leave traces of grease on the glass, which when switching bulb on, evaporate and cause the glass to cloud over.*

Replacing dipped beam bulb

- -> Release spring clip -arrow- and take off sealing cover.

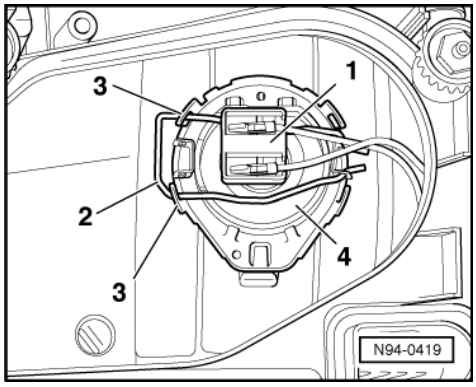


Protected by copyright. Copying for private or commercial purposes, in whole or in part, is not permitted unless authorised by Volkswagen AG. Volkswagen AG does not guarantee or accept any liability with respect to the correctness of information in this document. Copyright by Volkswagen AG.
satelettronica

- -> Pull connector -1- off bulb.
- Push retaining clip -2- over the lugs -3- and release.
- Pull bulb -4- out of reflector.
- Do not touch bulb glass when installing.
- Insert new bulb so that the lugs on the bulb plate align with the cut-outs in the reflector.

- Fit connector -1-.

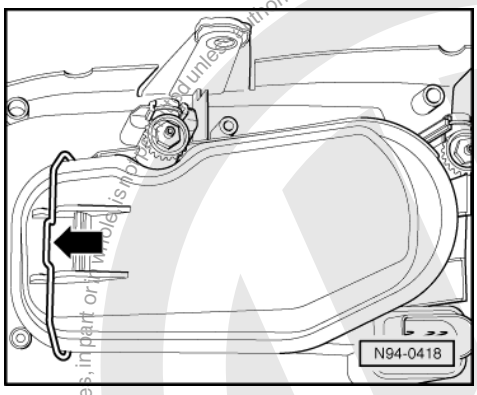


- Fit sealing cover.
- After installing a new bulb check function of headlight.

Replacing main beam bulb

- -> Release spring clip -arrow- and take off sealing cover.

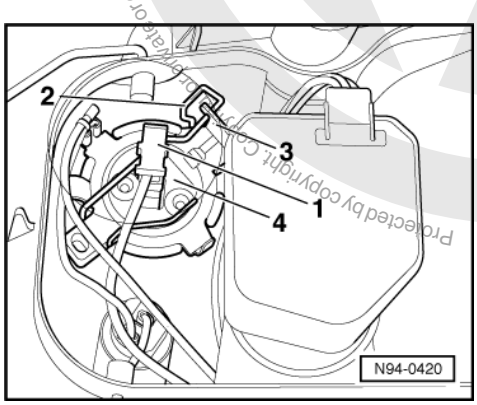


- -> Pull connector -1- off bulb.
- Push retaining clip -2- over lug -3- and release.
- Pull bulb -4- out of reflector.
- Do not touch bulb glass.
- Insert new bulb so that the lugs on the bulb plate align with the cut-outs in the reflector.
- Fit connector -1-.
- Fit sealing cover.

- After installing a new bulb check function of headlight.

Protected by copyright. Copyright by Volkswagen AG.
Copyright by Volkswagen AG. Volkswagen AG does not guarantee or accept any liability with respect to the correctness of information in this document.
Copying for private or commercial purposes, in part or in whole, is not permitted unless authorised by Volkswagen AG.
satelettronica

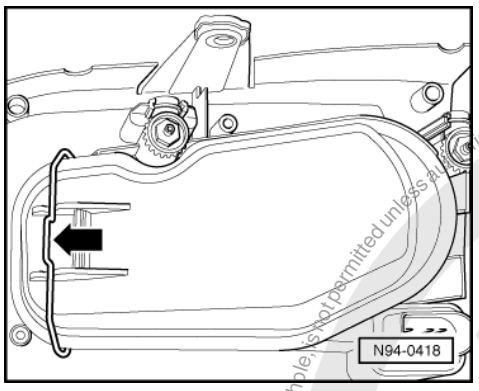


Replacing side light bulb

- -> Release spring clip -arrow- and take off sealing cover.

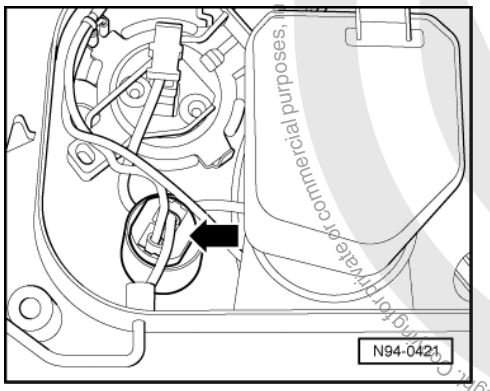


- -> Pull bulb with holder on connector out of reflector -arrow-.
- After changing bulb, push bulb with holder fully into the reflector onto stop.
- Fit sealing cover.
- After installing a new bulb check function of headlight.

## 1.11 - Replacing headlight bulb with gas discharge

Warning!
Always disconnect the battery earth strap before working on parts of gas discharge headlight marked with yellow high voltage symbols.

*Note:*

*Do not touch bulb glass when fitting a new bulb. Fingers leave traces of grease on the glass, which when switching bulb on, evaporate and cause the glass to cloud over.*

Replacing dipped beam (gas discharge) bulb

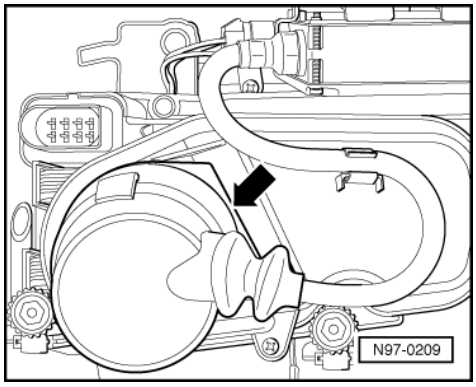


Protected by Copyright. Copying for private or commercial purposes, in part or in whole, is not permitted unless authorised by Volkswagen AG. Volkswagen AG does not guarantee or accept any liability with respect to the correctness of information in this document. Copyright by Volkswagen AG.
satelettronica

- With the ignition switched off disconnect the battery earth strap.
- -> Pull off rubber cap -arrow- on headlight housing.

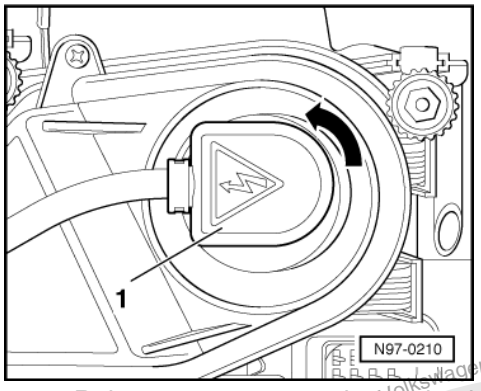


- -> Release connector -1- by turning in direction of arrow and pull off.

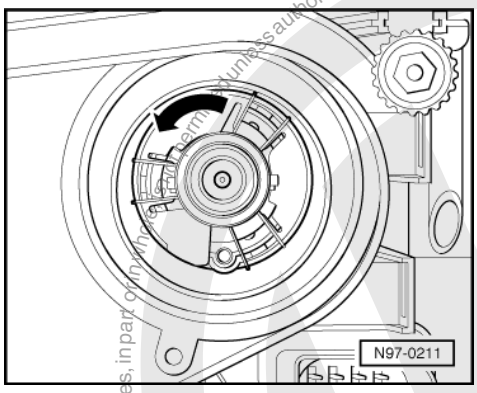


- -> Turn retainer in direction of arrow and remove.
- Carefully remove gas discharge bulb from headlight housing.
- Insert new bulb so that the lugs on the bulb plate align with the cut-outs in the reflector.

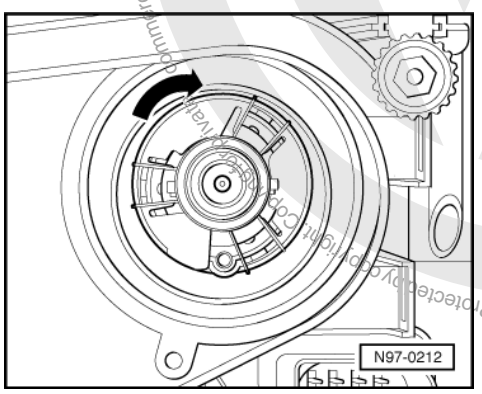


- -> Insert retainer and secure by turning in direction of arrow.

Protected by Copyright. Copyright by Volkswagen AG. Volkswagen AG does not guarantee or accept any liability with respect to the correctness of information in this document. Copyright by Volkswagen AG. Volkswagen AG. Volkswagen AG does not guarantee or accept any liability with respect to the correctness of information in this document. Copyright by Volkswagen AG. Volkswagen AG. Volkswagen AG does not guarantee or accept any liability with respect to the correctness of information in this document. Copyright by Volkswagen AG. Volkswagen AG. Volkswagen AG does not guarantee or accept any liability with respect to the correctness of information in this document. Copyright by Volkswagen AG.
satelettronica

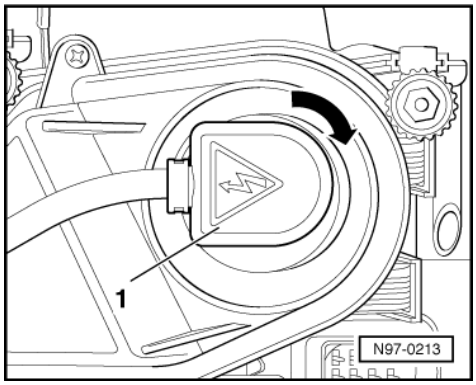


- -> Secure connector -1- by turning in direction of arrow.
- After installing a new bulb check function of headlight.
- Check headlight settings => Page 144 .

## Replacing main beam bulb

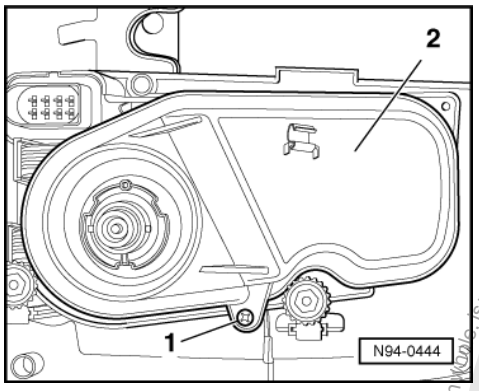


- With the ignition switched off disconnect the battery earth strap.
- Remove headlight => Page 145 .
- Remove gas discharge bulb control unit => Page 155 .
- -> Remove screw -1- and then protective cap -2-.

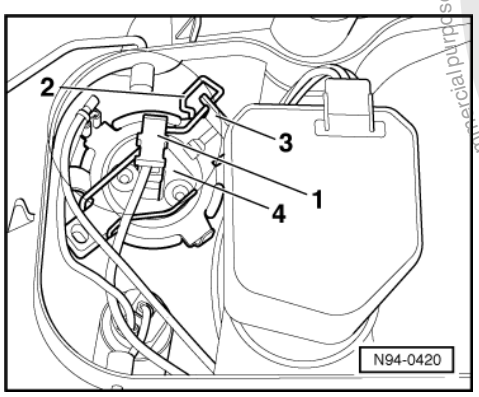


- -> Pull connector -1- off bulb.
- Push retaining clip -2- over lug -3- and release.
- Pull bulb -4- out of reflector.
- Do not touch bulb glass.
- Insert new bulb so that the lugs on the bulb plate align with the cut-outs in the reflector.
- Fit connector -1-.
- Fit sealing cover.

- Install gas discharge bulb control unit => page 155 .
- Remove headlight => Page 145 .
- After installing a new bulb check function of headlight.
- Check headlight settings => Page 144 .

Protected by copyright. Copyright for private or commercial purposes, in part or in whole, is not permitted unless authorised by Volkswagen AG. Volkswagen AG does not guarantee or accept any liability with respect to the correctness of information in this document. Copyright by Volkswagen AG.
satelettronica

Replacing side light bulb

- With the ignition switched off disconnect the battery earth strap.
- Remove headlight => Page 145 .

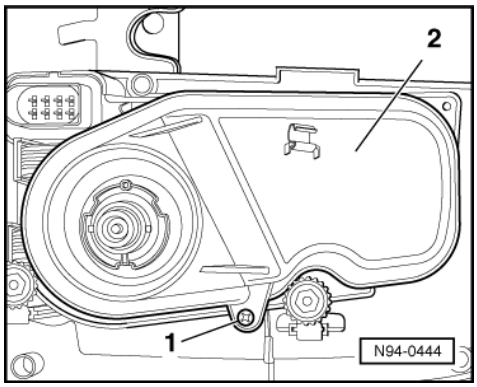


- Remove gas discharge bulb control unit => Page 155 .
- -> Remove screw -1- and then protective cap -2-.

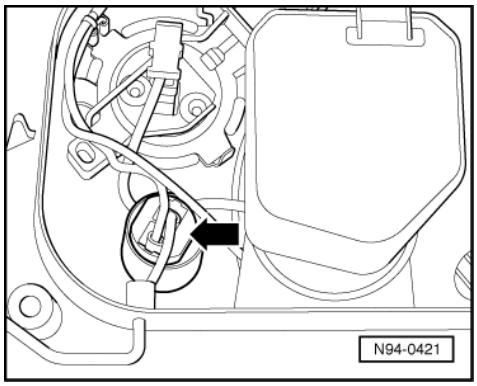


- -> Pull bulb with holder on connector out of reflector -arrow-.
- After changing bulb, push bulb with holder fully into the reflector onto stop.
- Fit sealing cover.
- Install gas discharge bulb control unit => page 155 .
- Remove headlight => Page 145 .
- After installing a new bulb check function of headlight.
- Check headlight settings => Page 144 .

## 1.12 - Removing and installing headlight range control positioning motor, vehicles 10.99 >

Removing and installing headlight range control positioning motor for headlights with gas discharge bulbs => Page 154 .

*Notes:*

- The positioning motor can only be removed and installed when the headlight housing has been removed.
- If positioning motors are removed and installed or renewed, always carry out the headlight basic setting with headlight adjusting equipment. Angle setting is embossed on headlight housing.

satelettronica

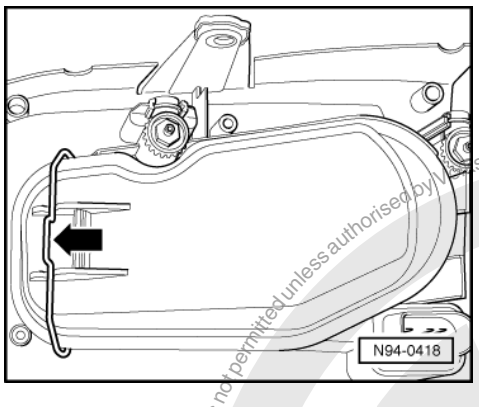


Removing:

- Remove headlight => Page 145 .
- -> Release spring clip -arrow- and take off sealing cover.

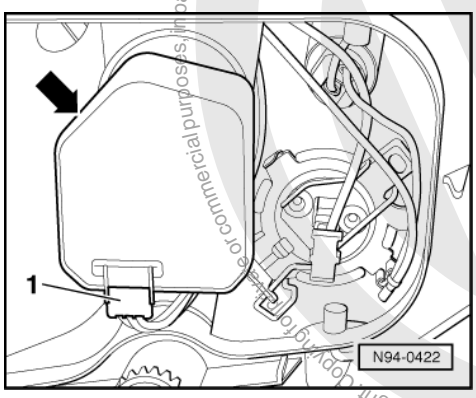


- -> Disconnect headlight range control positioning motor connector -1-.
- Release left-hand positioning motor -arrow- by turning to right and right-hand by turning to left.
- Pull positioning shaft ball head out of locking device on reflector.

Installing:

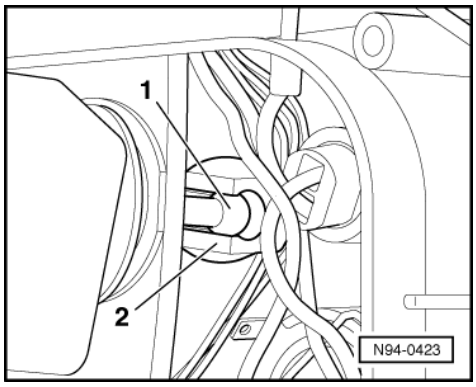


- -> Guide positioning motor positioning shaft -1- into ball head mounting -2- and push up reflector base plate when doing this.
- Lock positioning motor in fitting position by turning.
- Fit connections.
- Fit sealing cover.
- Remove headlight => Page 145 .
- Check headlight settings and adjust if necessary =>Page 144 .

satelettronica

## 1.13 - Removing and installing headlight range control positioning motor for headlights with gas discharge bulbs

Warning!
Always disconnect the battery earth strap before working on parts of gas discharge headlight marked with yellow high voltage symbols.

*Notes:*

- The positioning motor can only be removed and installed when the headlight housing has been removed.
- If positioning motors are removed and installed or renewed, always carry out the headlight basic setting with headlight adjusting equipment. Angle setting is embossed on headlight housing.

**Removing:**

- With the ignition switched off disconnect the battery earth strap.
- Remove headlight => Page 145 .
- Remove gas discharge bulbs control unit => Page 155 .

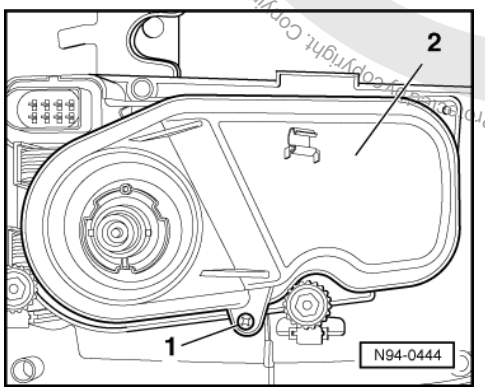


- -> Remove screw -1- and then protective cap -2-.

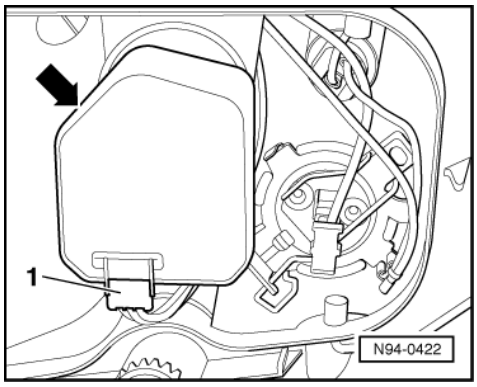


- -> Disconnect headlight range control positioning motor connector -1-.
- Release left-hand positioning motor -arrow- by turning to right and right-hand by turning to left.
- Pull positioning shaft ball head out of locking device on reflector.

Copyright by Volkswagen AG. Volkswagen AG does not guarantee or accept any liability with respect to the correctness of information in this document. Copyright by Volkswagen AG.
satelettronica

Installing:

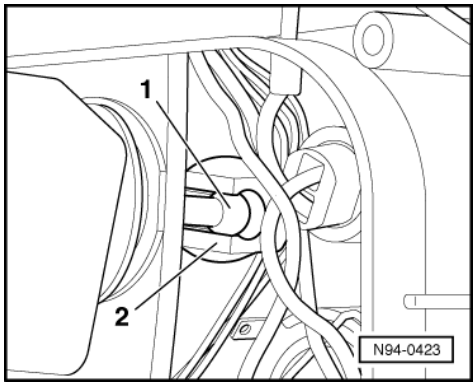


- -> Guide positioning motor positioning shaft -1- into ball head mounting -2- and push up reflector base plate when doing this.
- Lock positioning motor in fitting position by turning.
- Fit connections.
- Fit sealing cover.
- Install gas discharge bulb control unit => page 155 .
- Remove headlight => Page 145 .
- Check headlight settings and adjust if necessary =>Page 144 .

## 1.14 - Removing and installing gas discharge bulb control unit

Warning!
Always disconnect the battery earth strap before working on parts of gas discharge headlight marked with yellow high voltage symbols.

Removing:

- With the ignition switched off disconnect the battery earth strap.
- Remove headlight => Page 145 .

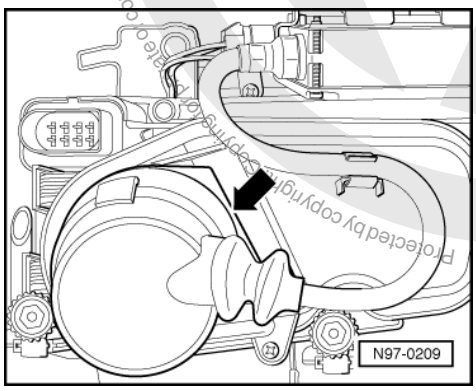


- -> Remove rubber cap -arrow- from headlight housing.

Protected by copyright. Copyright by Volkswagen AG. Volkswagen AG does not guarantee or accept any liability with respect to the correctness of information in this document. Copyright by Volkswagen AG. Reproduction not permitted, even in whole or in part, for commercial purposes, unless authorised by Volkswagen AG.
satelettronica

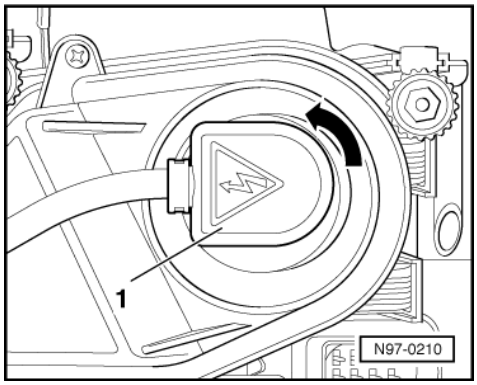


- -> Release connector -1- by turning in direction of arrow and pull off.

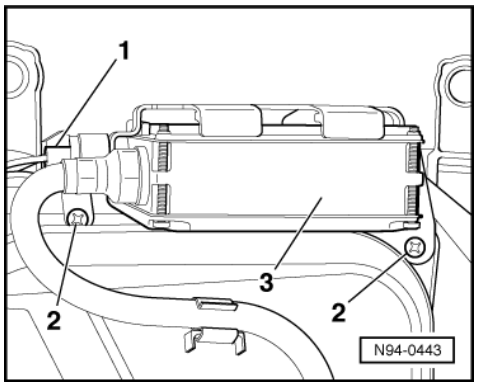


- -> Separate connector -1-, remove cross-head screws -2- and remove control unit -3-.

**Installing:**

- Tighten cross-head screws -2- and push on connector -1-.

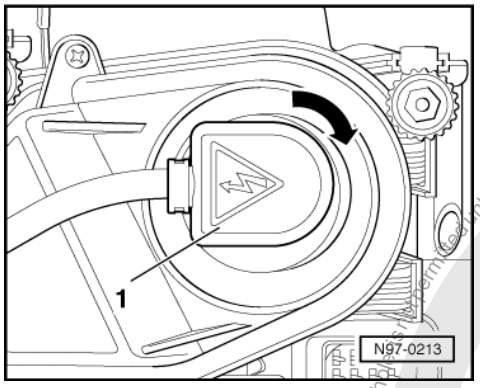


- -> Secure connector -1- by turning in direction of arrow.

Protected by copyright. Copying for private or commercial purposes, in part or in whole, is not permitted unless authorised by Volkswagen AG. Volkswagen AG does not guarantee or accept any liability with respect to the correctness of information in this document. Copyright by Volkswagen AG.
satelettronica

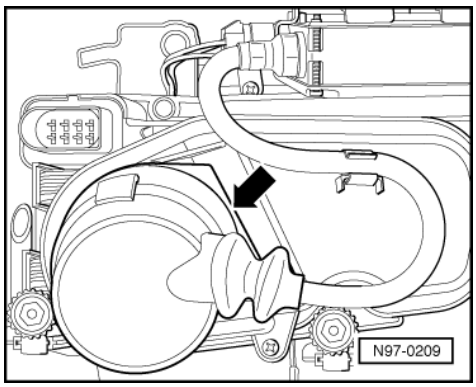


- -> Push on rubber cap -arrow- to headlight housing.
- Remove headlight => Page 145 .
- Check headlight settings and adjust if necessary =>Page 144 .

# 2 - Front fog lights

## 2.1 - Front fog lights

## 2.2 - Removing and installing front fog lights, vehicles >09.99

**Vehicles with small bumper:**

- Remove skirt

=> General body repairs; Repair group 50; Body front Body front

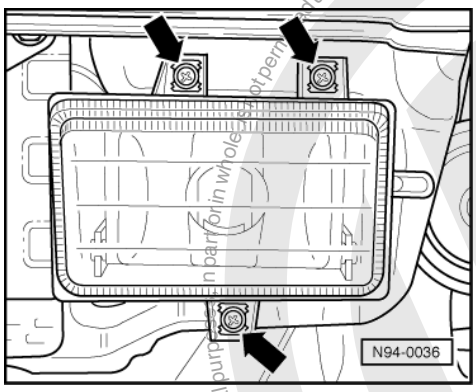


- -> Remove securing screws -arrows-.
- Pull foglight housing out of bumper and disconnect connector.

Installation is carried out in the reverse sequence.

- Check headlight settings.

=> Maintenance; Polo 1995 ➢

**Vehicles with large bumper:**

- Remove bumper cover

satelettronica
Protected by copyright. Copying for private or commercial purposes, in part or in whole, is not permitted unless authorised by Volkswagen AG. Volkswagen AG does not guarantee or accept any liability with respect to the correctness of information in this document. Copyright by Volkswagen AG.

=> General body repairs; Repair group 63; Bumper front Bumper front

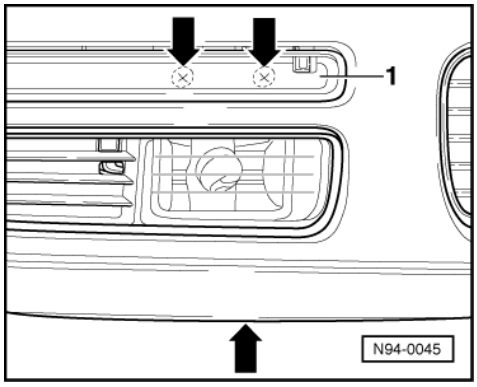


- -> Unclip trim plate -1-.
- Remove securing screws -arrows-.
- Pull foglight housing to rear out of bumper and disconnect connector.

Installation is carried out in the reverse sequence.

## 2.3 - Removing and installing fog lights, vehicles 10.99 >

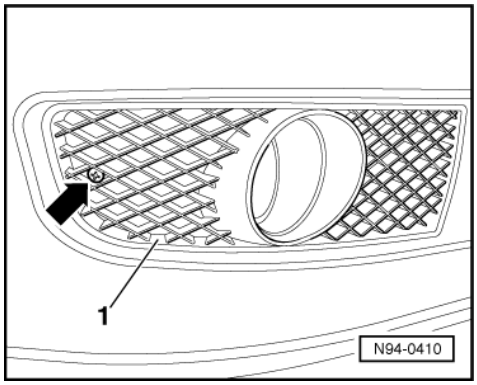


- -> Remove cross-head screw -arrow- and take out trim -1-.

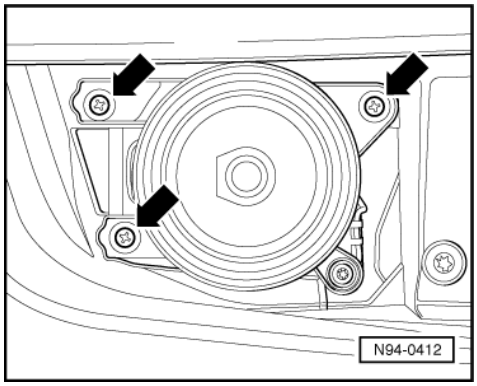


- -> Remove securing screws -arrows-.
- Pull foglight housing forwards out of bumper and disconnect connector.

Installation is carried out in the reverse sequence.

- Check headlight settings.

=> Maintenance; Polo 1995 ‣

Protected by copyright. Copying for private or commercial purposes, in part or in whole, is not permitted unless authorised by Volkswagen AG. Volkswagen AG does not guarantee or accept any liability with respect to the correctness of information in this document. Copyright by Volkswagen AG.
satelettronica

## 2.4 - Removing and installing foglight bulb, vehicles >09.99

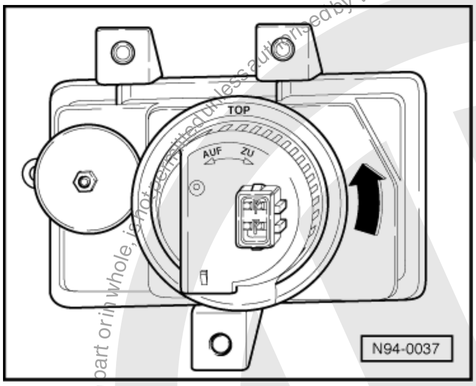


*Note:*

*Do not touch glass of halogen bulb.*

- -> Turn cap in direction of arrow and remove.

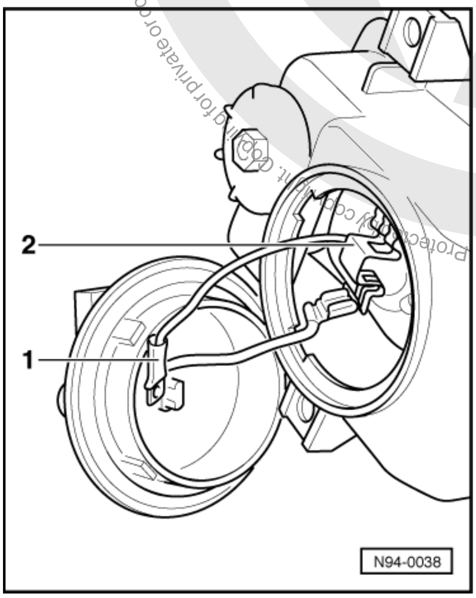


- -> Disconnect connector -1- of halogen bulb H3 (12V/55W) in the cap.
- Press spring clip -2- over the lug and swing out.
- Pull bulb out of housing.

Installation is carried out in the reverse sequence.

- Insert bulb so that the recess in the bulb holder aligns with housing guide lug.
- After installing a new bulb check headlight settings.

=> Maintenance; Polo 1995 ‣

Protected by copyright. Copying for private or commercial purposes, in part or in whole, is not permitted unless authorised by Volkswagen AG. Volkswagen AG does not guarantee or accept any liability with respect to the correctness of information in this document. Copyright by Volkswagen AG.

satelettronica

## 2.5 - Removing and installing fog light bulb, vehicles 10.99 >

Removing:

*Note:*

*Do not touch glass of halogen bulb.*

- Disconnect connector on fog light.

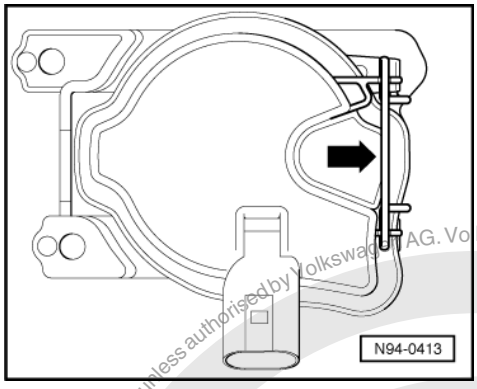


- -> Unhook securing clip -arrow- and remove protective cap.

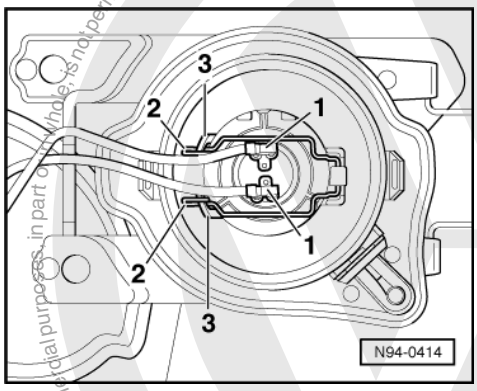


- -> Disconnect connector -1- of halogen bulb H7 (12V/55W).
- Press spring clip -2- over the lugs -3- and swing out.
- Pull bulb out of housing.

Installation is carried out in the reverse sequence.

- Insert bulb so that the recess in the bulb holder aligns with housing guide lug.
- After installing a new bulb check headlight settings.

=> Maintenance; Polo 1995 ➤

Protected by copyright. Copying for private or commercial purposes, in part or in whole, is not permitted unless authorised by Volkswagen AG. Volkswagen AG does not guarantee or accept any liability with respect to the correctness of information in this document. Copyright by Volkswagen AG.
satelettronica

# 3 - Front turn signals

## 3.1 - Front turn signals

## 3.2 - Removing and installing front turn signals, vehicles > 09.99

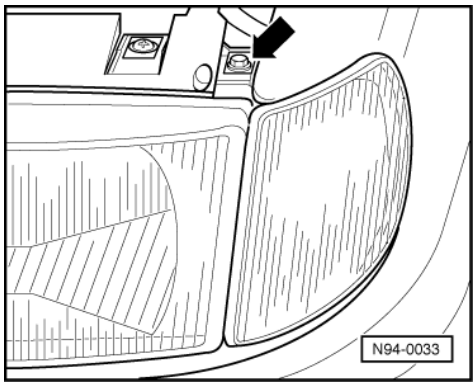


Removing:

- -> Remove securing screw -arrow-.
- Pull turn signal out forwards.
- Disconnect connector.

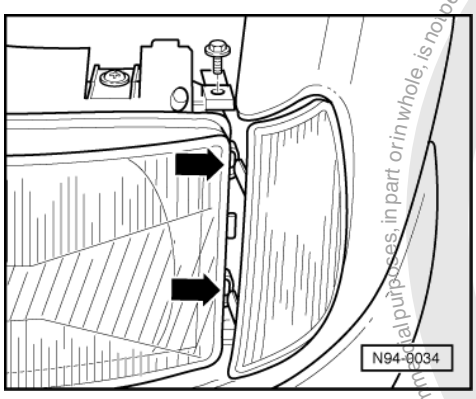


Installing:

- Connect connector.
- -> Push turn signal into the wing cut-out.

*Note:*

*The turn signal tabs must locate in the guides -arrows- of the headlight housing.*

- Screw in securing screw.

Protected by copyright. Copying for private or commercial purposes, in part or in whole, is not permitted unless authorised by Volkswagen AG. Volkswagen AG does not guarantee or accept any liability with respect to the correctness of information in this document. Copyright by Volkswagen AG.
satelettronica

## 3.3 - Removing and installing front turn signal, vehicles 10.99 >

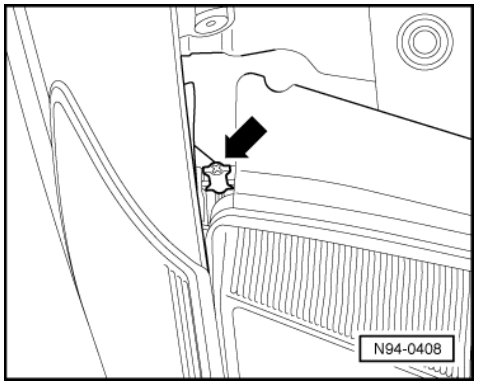


**Removing:**

- -> Release screw -arrow- by turning left and pull upwards.

***Note:***

*By pulling the screw upwards, the spring tension of the turn signal mounting is released.*

- Pull turn signal out forwards.

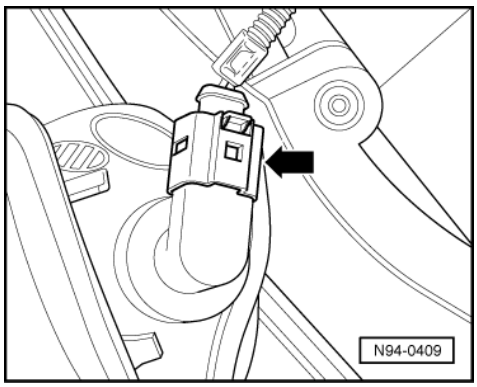


- -> Disconnect connector -arrow-.

**Installing:**

- Connect connector.

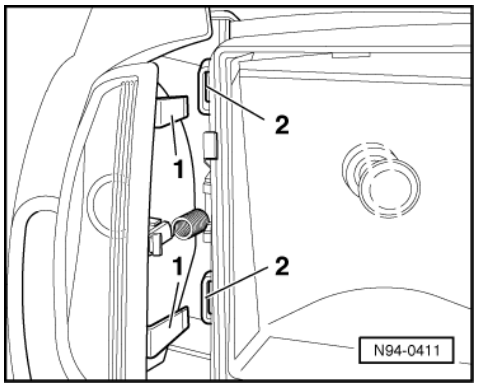


- -> Push turn signal into the wing cut-out.

Protected by copyright. Copying for private or commercial purposes, in part or in whole, is not permitted unless authorised by Volkswagen AG. Volkswagen AG does not guarantee or accept any liability with respect to the correctness of information in this document. Copyright by Volkswagen AG.
satelettronica

*Note:*

*The turn signal tabs -1- must locate in the guides -2- of the headlight housing.*

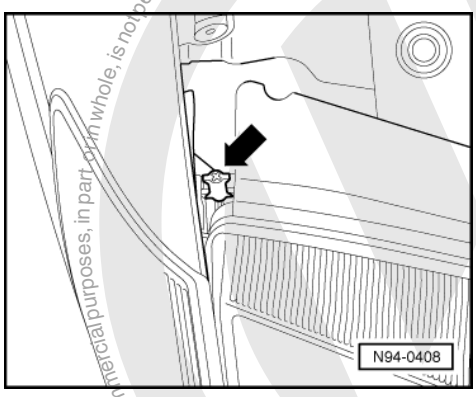


- -> Secure screw -arrow- by pressing down and turning right.

## 3.4 - Replacing turn signal bulb, vehicles > 09.99

Removing:

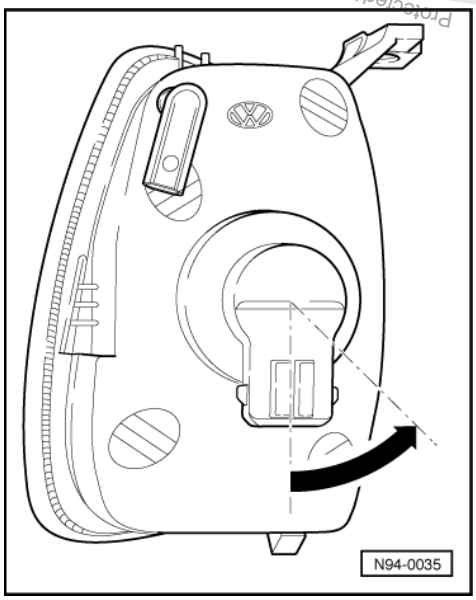


- -> Turn bulb holder in direction of arrow and pull out from housing.
- Remove bulb from the holder.

Installing:

*Note:*

*Do not touch bulb glass when fitting a new bulb. Fingers leave traces of grease on the glass, which when switching bulb on, evaporate and cause the glass to cloud over.*

When installing, ensure that the bulb holder engages in the housing by turning in opposite direction to direction of arrow.

Protected by copyright. Copyright by Volkswagen AG. Volkswagen AG does not guarantee or accept any liability with respect to the correctness of information in this document. Copyright by Volkswagen AG. Commercial purposes, in part or in whole, is not permitted unless authorised by Volkswagen AG.
satelettronica

### 3.5 - Replacing turn signal bulb, vehicles 10.99 >

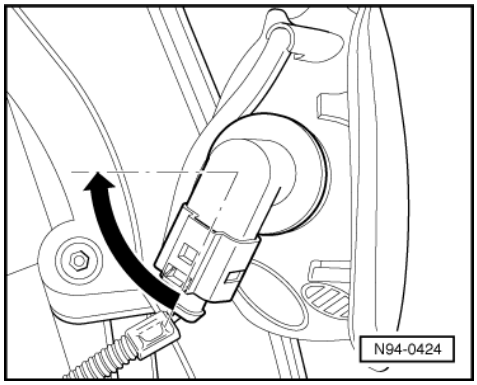


Removing:
- Remove front turn signals => Page 162 .

*Note:*
*The turn signal connector does not have to be separated when replacing the bulb.*
- -> Turn bulb holder in direction of arrow and pull out from housing.
- Remove bulb from the holder.

Installing:
*Note:*
*Do not touch bulb glass when fitting a new bulb. Fingers leave traces of grease on the glass, which when switching bulb on, evaporate and cause the glass to cloud over.*
When installing, ensure that the bulb holder engages in the housing by turning in opposite direction to direction of arrow.

## 4 - Side mounted turn signals

### 4.1 - Side mounted turn signals

### 4.2 - Removing and installing side mounted turn signals

Removing:
*Note:*
*Extreme caution must be used when removing the side turn signal as it is only possible to be removed in one direction and it is not possible to recognise which side of the turn signal the spring clip or the mounting sits.*
*When using force to remove the light on the spring clip side there is a great danger that the turn signal or the vehicle paintwork surface will be damaged.*

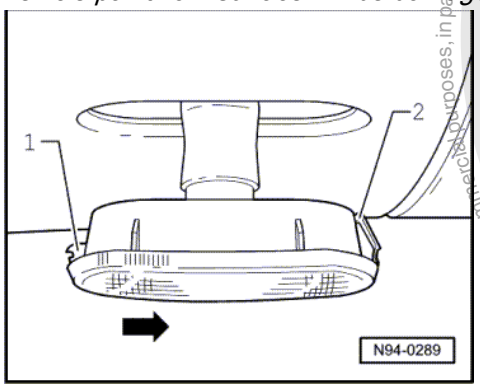


Protected by copyright. Copying for private or commercial purposes, in part or in whole, is not permitted unless authorised by Volkswagen AG. Volkswagen AG does not guarantee or accept any liability with respect to the correctness of information in this document. Copyright by Volkswagen AG.
satelettronica

- -> Press turn signal with a suitable tool on the mounting position side -1- carefully in direction of arrow against the force of the spring clip -2- on the opposite side and lever out (protect paintwork surface with adhesive tape first if necessary).
- Pull rubber holder with push-fit bulb off bulb housing.
- Pull push-fit bulb (12 V/5 W) out of housing (do not turn).

Installing:

- Fit rubber holder with push-fit bulb onto bulb housing.
- Insert turn signal in wing.
- After installing a new bulb check function of turn signals.

Protected by copyright. Copying for private or commercial purposes, in whole, is not permitted unless authorised by Volkswagen AG. Volkswagen AG does not guarantee or accept any liability with respect to the correctness of information in this document. Copyright by Volkswagen AG.
satelettronica

# 5 - Tail lights

## 5.1 - Tail lights

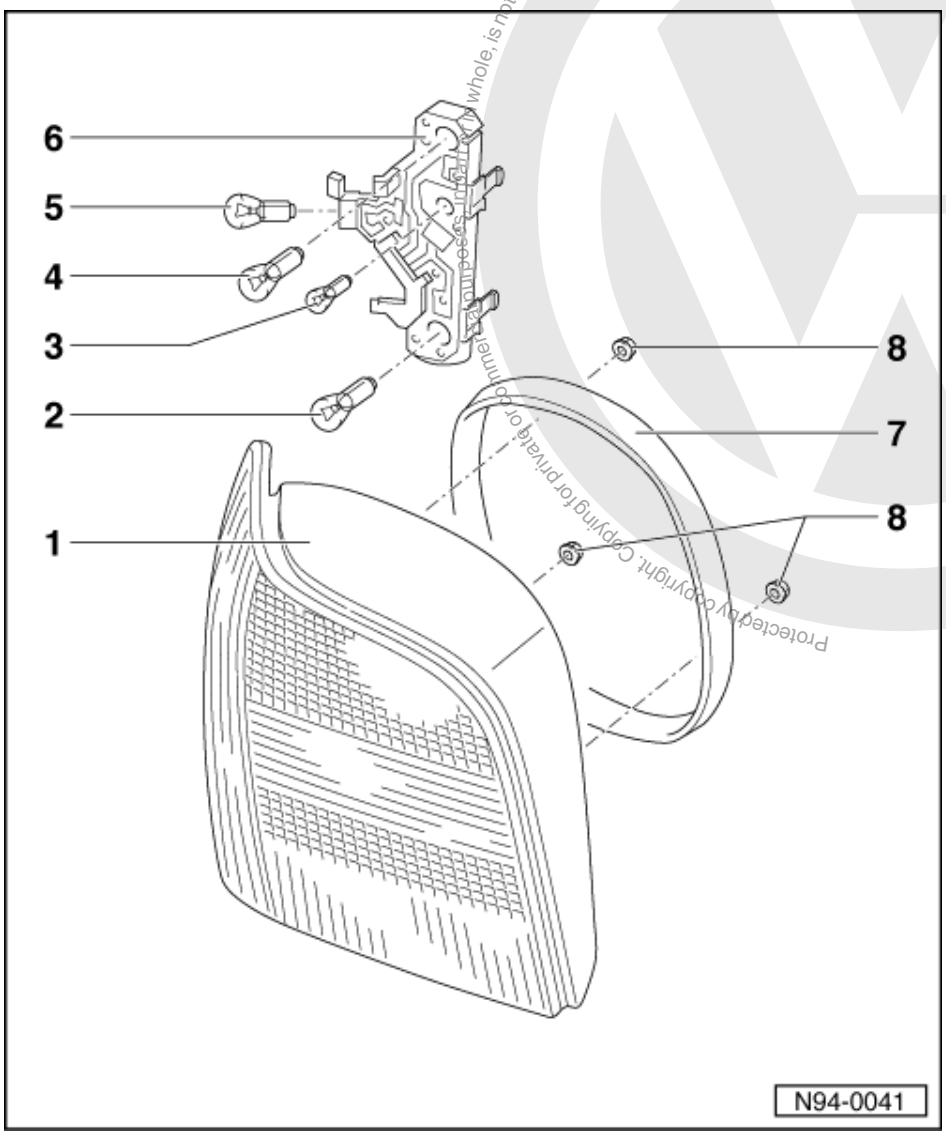

## 5.2 - Assembly overview: Tail light, vehicles >09.99

Warning!
Always disconnect the battery earth strap before working on the electrical system.

1 Housing
2 Rear fog light bulb
  12V / 21W
  Only installed on left side (LHD)
3 Tail light bulb
  12V / 5W
4 Brake light bulb
  12V / 21W

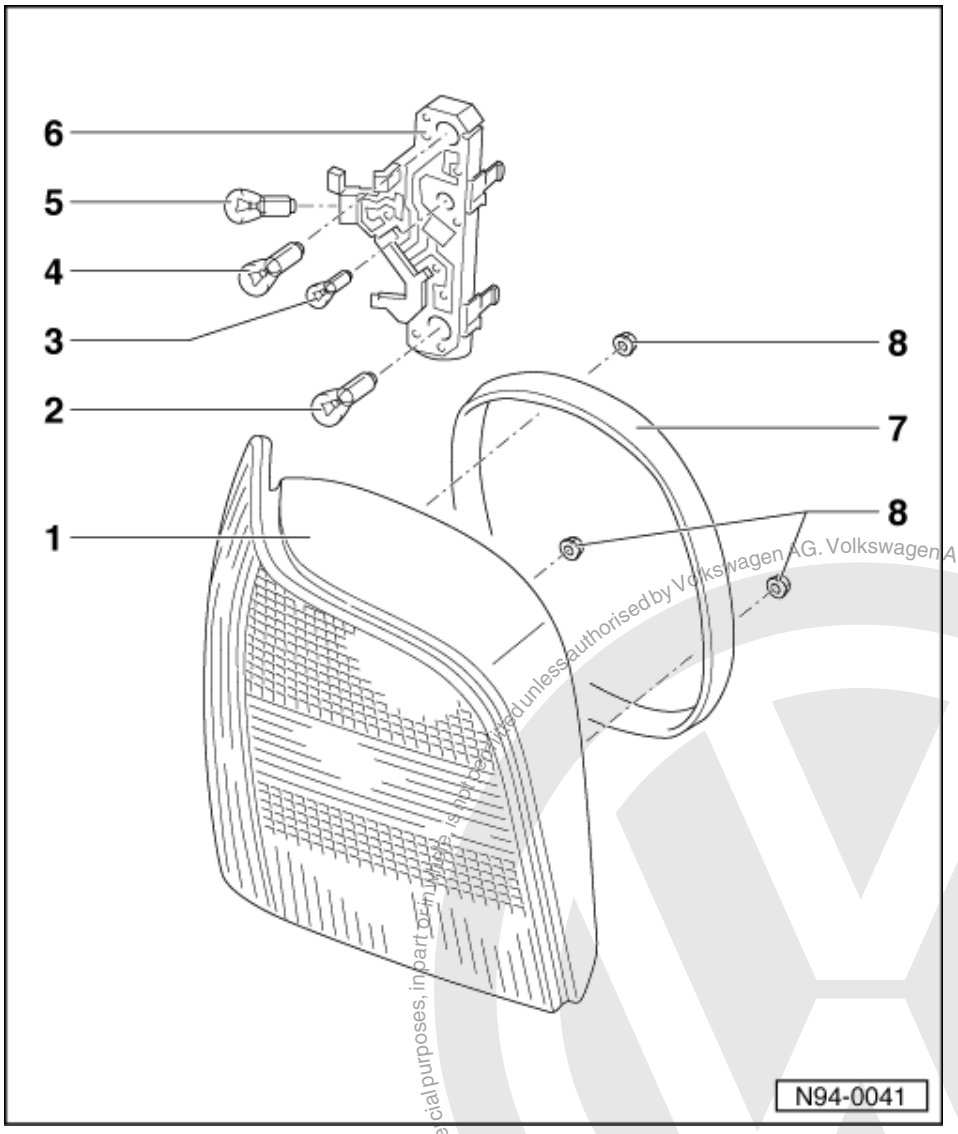


5 Turn signal bulb
  12V / 21W
6 Bulb holder
  ◆ Removing and installing => Page 170
7 Gasket
8 Hexagon nut M5

Protected by copyright. Copying for private or commercial purposes, in part or in whole, is not permitted unless authorised by Volkswagen AG. Volkswagen AG does not guarantee or accept any liability with respect to the correctness of information in this document. Copyright by Volkswagen AG.
satelettronica

## 5.3 - Assembly overview: Tail light, vehicles 10.99 >

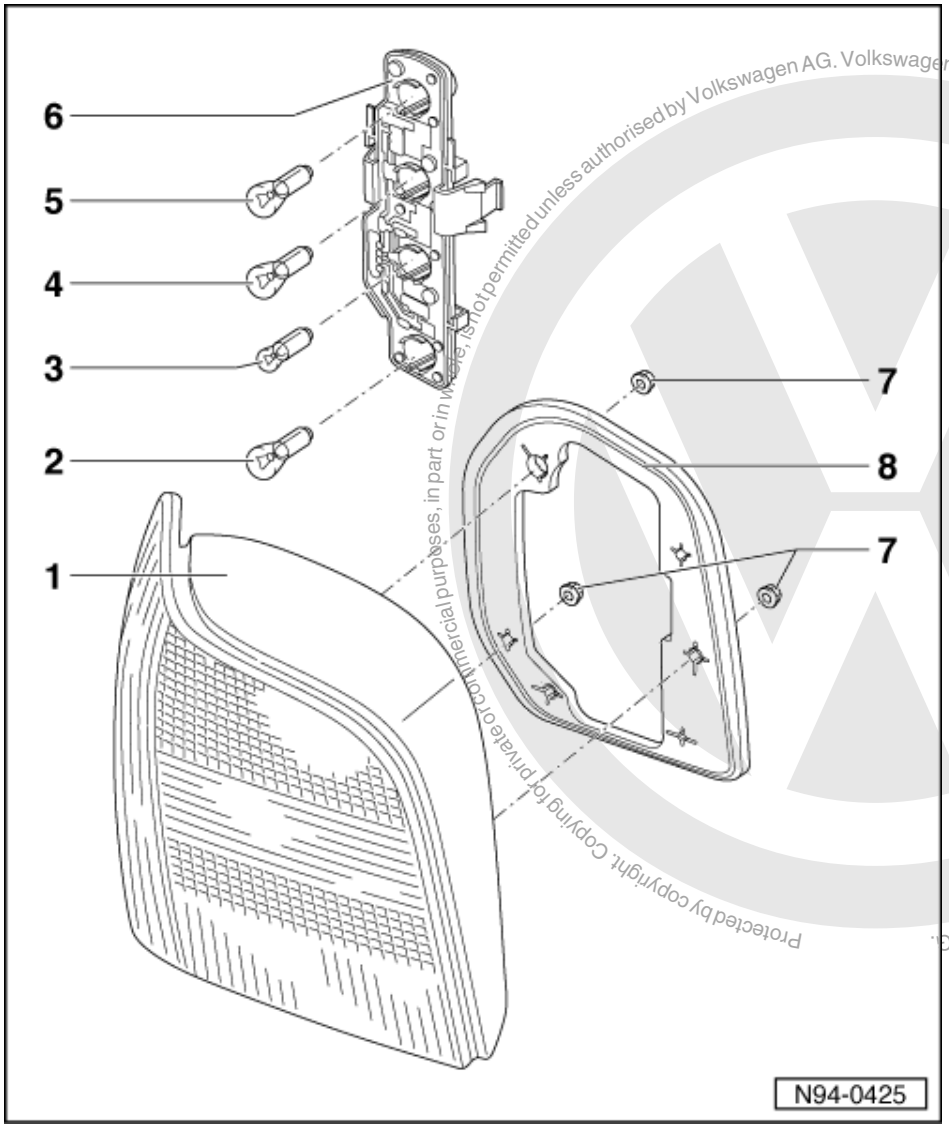


Protected by copyright. Copying for private or commercial purposes, in part or in whole, is not permitted unless authorised by Volkswagen AG. Volkswagen AG does not guarantee or accept any liability with respect to the correctness of information in this document. Copyright by Volkswagen AG.
satelettronica

Warning!
Always disconnect the battery earth strap before working on the electrical system.

1 Housing
- Removing and installing => Page 169

2 Rear fog light bulb
12V / 21W
Only installed on left side (LHD)

3 Tail light bulb
12V / 5W

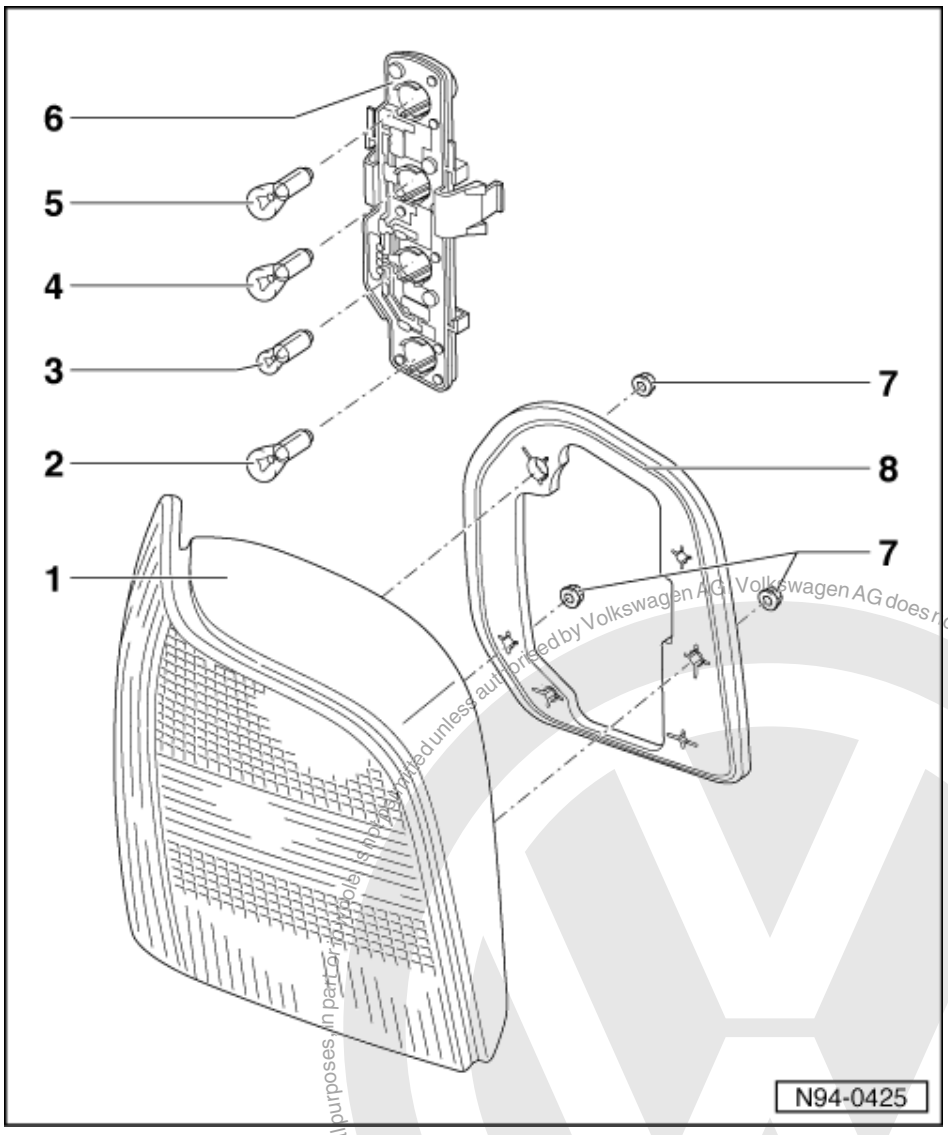


4 Turn signal bulb
12V / 21W
5 Brake light bulb
12V / 21W
6 Bulb holder
- Removing and installing
=> Page 171
7 Hexagon nut M5
8 Gasket

Protected by copyright. Copying for private or commercial purposes, in part or in whole, is not permitted unless authorised by Volkswagen AG. Volkswagen AG does not guarantee or accept any liability with respect to the correctness of information in this document. Copyright by Volkswagen AG.
satelettronica

## 5.4 - Removing and installing tail light, vehicles >09.99

### Removing tail light

- Remove rear left or right luggage compartment side panel trim:

=> General body repairs, interior; Repair group 70

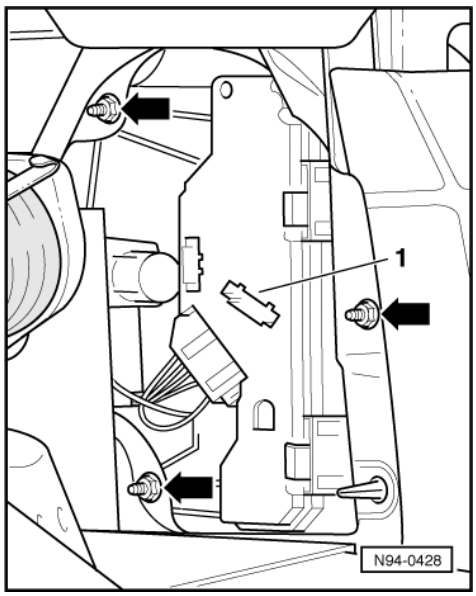


- -> Remove bulb holder -1- =>Page 170 .
- Remove securing nuts -arrows- and take out tail light housing.

### Installing tail light

- Insert tail light housing into body opening.
- Tighten securing nuts (3 Nm).
- Install bulb holder =>Page 170 .
- Install rear left or right luggage compartment side panel trim.

## 5.5 - Removing and installing tail light, vehicles 10.99 >

### Removing tail light

- Remove rear left or right luggage compartment side panel trim:

=> General body repairs, interior; Repair group 70

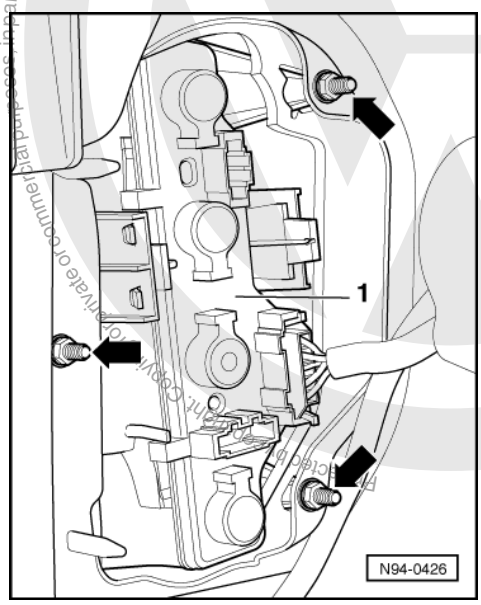


- -> Remove bulb holder -1- =>Page 171 .

satelettronica

- Remove securing nuts -arrows- and take out tail light housing.

**Installing tail light**

- Insert tail light housing into body opening.
- Tighten securing nuts (3 Nm).
- Install bulb holder =>Page 171 .
- Install rear left or right luggage compartment side panel trim.

## 5.6 - Removing and installing tail light bulb holder, vehicles > 09.99

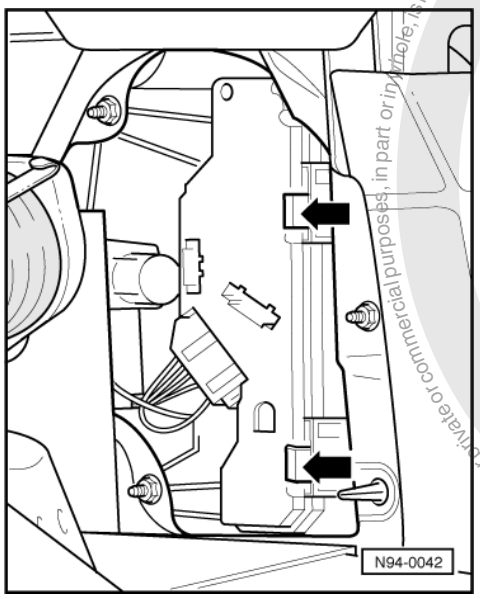


**Removing:**

- -> Release retainers -arrows- and remove bulb holder.
- Disconnect connector.

**Installing:**

Install in reverse order.

Protected by copyright. Copying for private or commercial purposes, in part or in whole, is not permitted unless authorised by Volkswagen AG. Volkswagen AG does not guarantee or accept any liability with respect to the correctness of information in this document. Copyright by Volkswagen AG.
satelettronica

## 5.7 - Removing and installing tail light bulb holder, vehicles 10.99 >

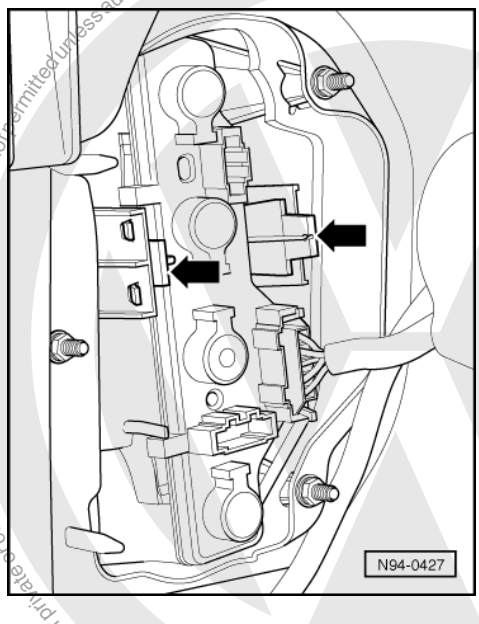


**Removing:**

- Pull off connector.
- -> Release retainers -arrows- and remove bulb holder.

**Installing:**

Install in reverse order.

Protected by copyright. Copyright by Volkswagen AG. Volkswagen AG does not guarantee or accept any liability with respect to the correctness of information in this document. Copyright by Volkswagen AG. Reproduction, in whole or in part, is not permitted unless authorised by Volkswagen AG. Volkswagen AG. Volkswagen AG does not guarantee or accept any liability with respect to the correctness of information in this document. Copyright by Volkswagen AG. Protected by copyright. Copying for private or commercial purposes, in part or in whole, is not permitted unless authorised by Volkswagen AG.

satelettronica

# 6 - Additional brake light

## 6.1 - Additional brake light

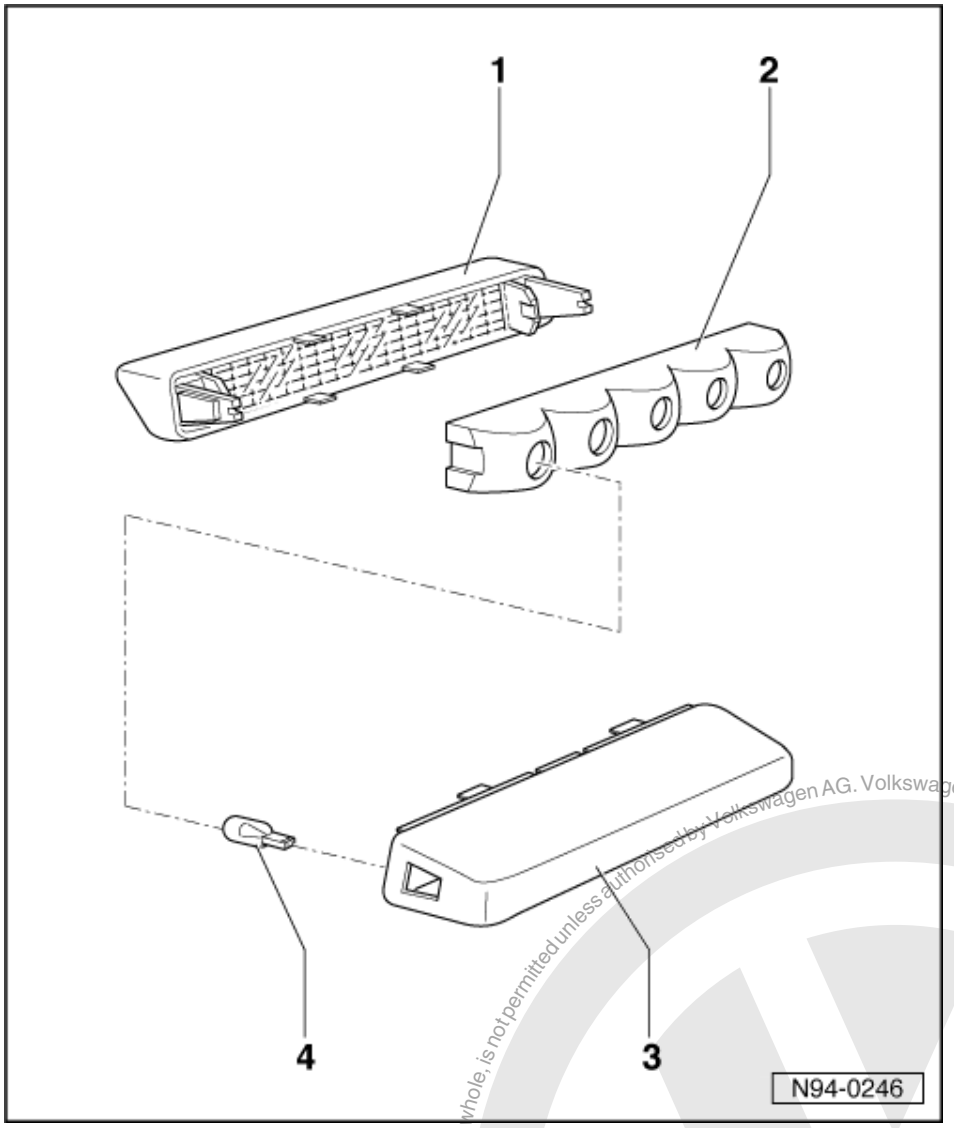


## 6.2 - Assembly overview, vehicles >09.99

1 Housing
- With lens

2 Reflector

3 Bulb holder
- Removing and installing => Page 173

4 Bulb 12V / 5 W

Protected by copyright. Copying for private or commercial purposes, part or in whole, is not permitted unless authorised by Volkswagen AG. Volkswagen AG does not guarantee or accept any liability with respect to the correctness of information in this document. Copyright by Volkswagen AG.
satelettronica

## 6.3 - Removing and installing additional brake light, vehicles > 09.99

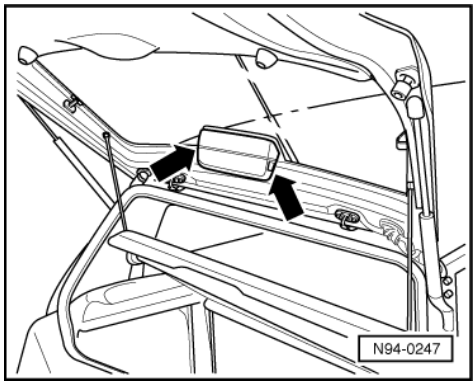


The additional brake light is installed on the rear window.

**-> Removing and installing bulb holder**

- Pull off connector, press retaining springs -arrows- back and take out bulb holder.

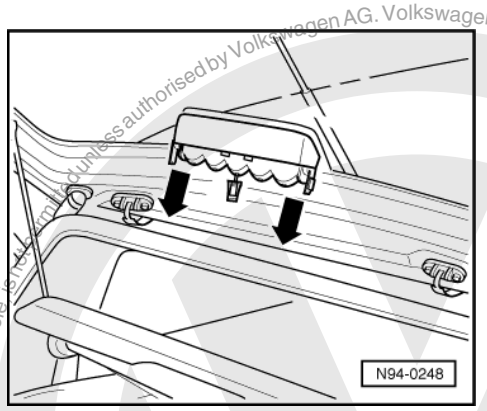


**Removing and installing brake light**

- -> Press retaining springs back and take housing with lens off rear window -arrows-.

## 6.4 - Removing and installing additional brake light, vehicles 10.99 >

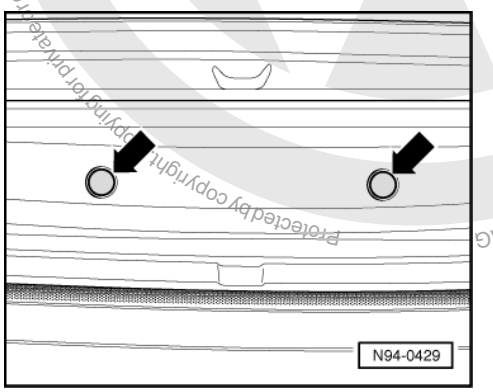


Removing and installing additional brake light, Polo GTI 10.99 ‣ =>Page 175 .

Protected by copyright. Copying for private or commercial purposes, in part or in whole, is not permitted unless authorised by Volkswagen AG. Volkswagen AG does not guarantee or accept any liability with respect to the correctness of information in this document. Copyright by Volkswagen AG.
satelettronica

Protected by copyright. Copying for private or commercial purposes, in part or in whole, is not permitted unless authorised by Volkswagen AG. Volkswagen AG does not guarantee or accept any liability with respect to the correctness of information in this document. Copyright by Volkswagen AG.

Removing additional brake light:

- -> Pull off rubber covers -arrows-.

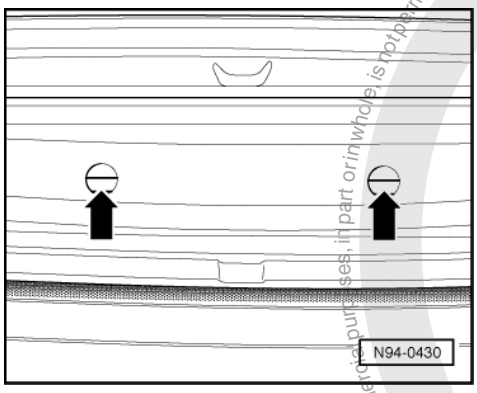


- -> Unclip by pushing in direction of arrows.

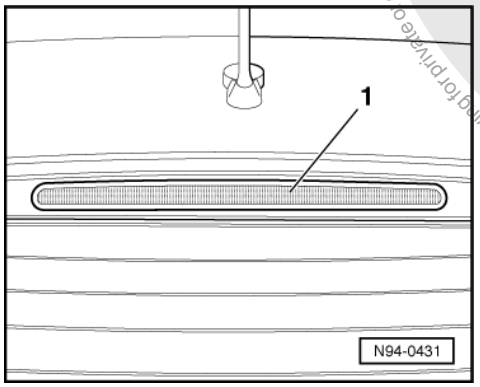


- -> Carefully pull out additional brake light -1- forwards and separate connector.

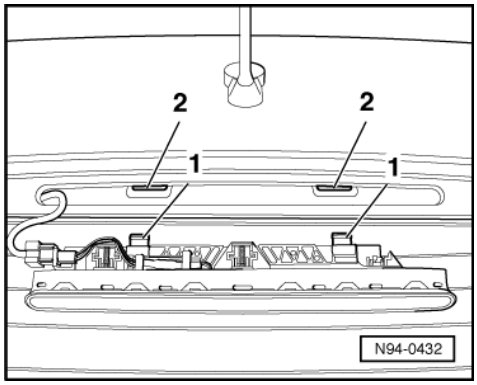


Installing additional brake light

Install in reverse order.

*Note:*

*-> The retaining lugs of the additional brake light -1- must be clipped in the body cut out -2-.*

satelettronica

Removing and installing bulb holder

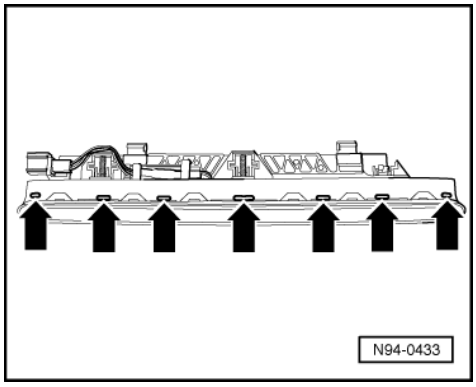


- -> Unclip bulb holder on both long sides -arrows-.

***Note:***

*On the bulb holder there is a circuit board with 20 soldered LED's which are covered by a plastic strip.*

*Changing an individual LED is not possible, the bulb holder must be renewed complete in cases of repair.*

Installation is carried out in the reverse sequence.

## 6.5 - Removing and installing additional brake light, Polo GTI 10.99 >

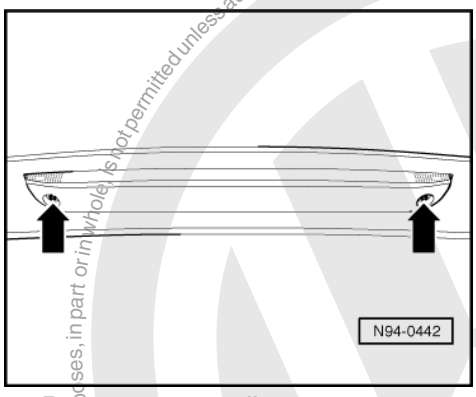


- Remove rear spoiler.

=> General body repairs, exterior; Repair group 66; Spoiler Spoiler

- Unclip and separate connector for additional brake light.
- -> Unscrew Torx bolts -arrows- and remove additional brake light from spoiler.

***Note:***

*The lamp holder and the additional brake light are one complete unit.*

Installation of the additional brake light is carried out in the reverse sequence.

Protected by copyright. Copying for private or commercial purposes, in part or in whole, is not permitted unless authorised by Volkswagen AG. Volkswagen AG does not guarantee or accept any liability with respect to the correctness of information in this document. Copyright by Volkswagen AG.

satelettronica

# 7 - Number plate lights

## 7.1 - Number plate lights

## 7.2 - Removing and installing number plate light, vehicles > 09.99

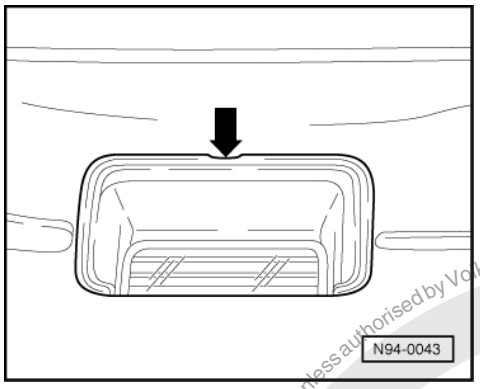


Removing:

- -> Carefully lever out number plate light with a suitable tool, until the retaining tab -arrow- releases.
- Disconnect connector.

Installing:

- Connect connector.
- Insert number plate light in bumper.

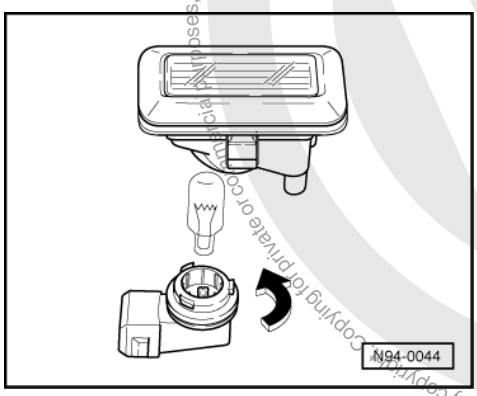


Removing and installing number plate light bulb

- Remove number plate light.
- -> Turn coupling in direction of arrow and pull out of the housing.
- Pull out bulb (12V/5W), do not turn.

When installing the coupling must be turned (opposite to direction of arrow) until it locates.

Protected by copyright. Copying for private or commercial purposes, in part or in whole, is not permitted unless authorised by Volkswagen AG. Volkswagen AG does not guarantee or accept any liability with respect to the correctness of information in this document. Copyright by Volkswagen AG.
satelettronica

## 7.3 - Removing and installing number plate light, vehicles 10.99 >

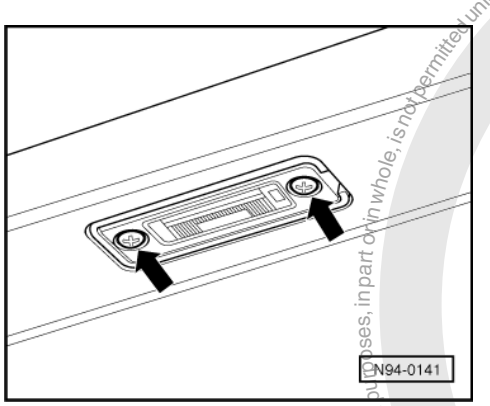


**Removing:**

- -> Remove cross-head screws -arrows- of the respective number plate light.
- Remove lens with bulb.
- Remove bulb (12 Volt/5 Watt)

**Installing:**

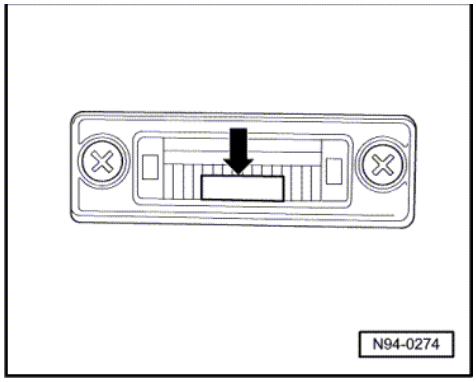


Install in reverse order.

***Note:***

*-> On the lens of the number plate light there is a small silver coloured light shield strip -arrow-. This must always face the bumper when installing the lens.*

Protected by copyright. Copying for private or commercial purposes, in part or in whole, is not permitted unless authorised by Volkswagen AG. Volkswagen AG does not guarantee or accept any liability with respect to the correctness of information in this document. Copyright by Volkswagen AG.
satelettronica

# 8 - Steering column switch and starter/ignition switch

## 8.1 - Steering column switch and starter/ignition switch

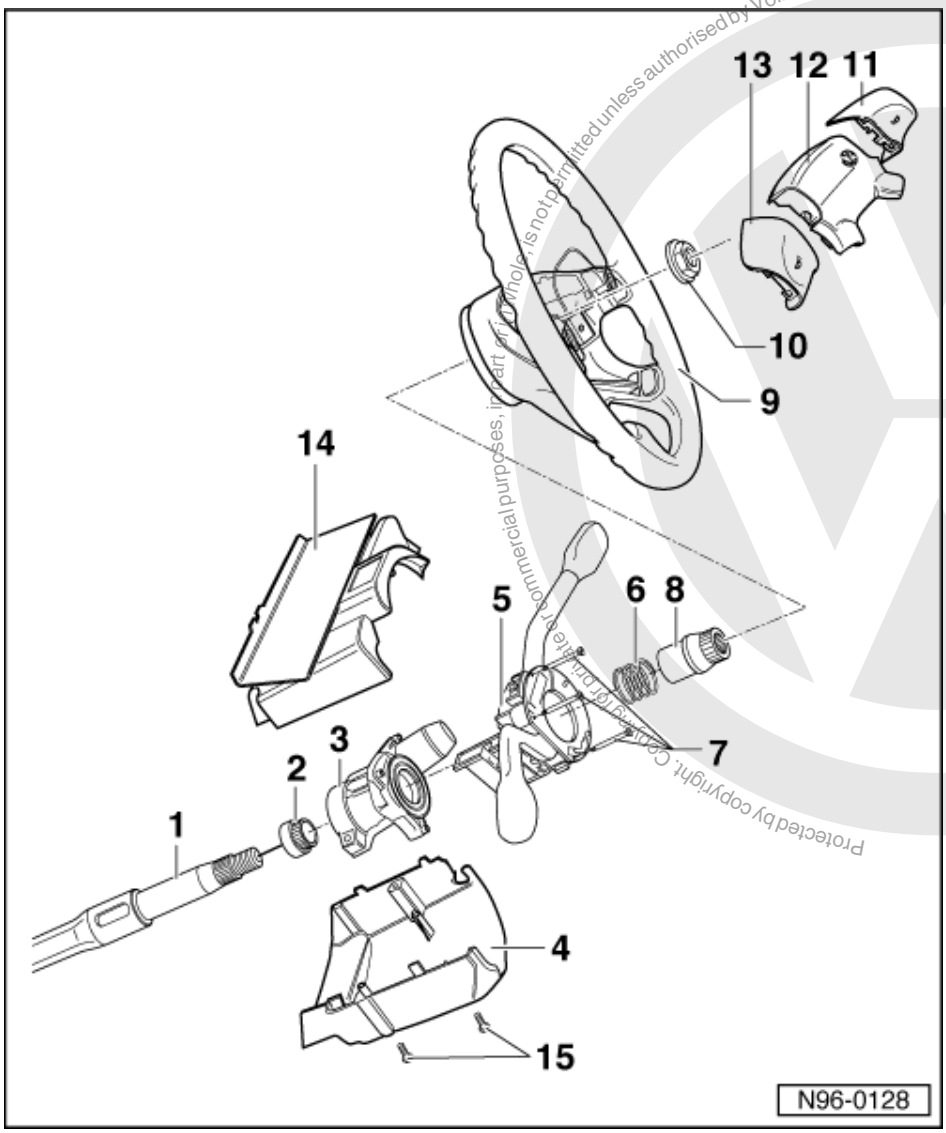


## 8.2 - Assembly overview: Steering column, vehicles > 09.99

Warning!
Always disconnect the battery earth strap before working on the electrical system.

*Notes:*

- Further information on assembling steering column

=> Running gear, axles, steering; Repair group 48; Steering; Airbag, steering wheel, steering column Steering Airbag, steering wheel, steering column

- Assembly instructions for vehicles with airbag

Protected by copyright. Copyright by Volkswagen AG. Volkswagen AG does not guarantee or accept any liability with respect to the correctness of information in this document. Copyright by Volkswagen AG.
satelettronica

=> General body repairs, interior; Repair group 69; Interior protection; Airbag Interior protection Airbag

1 Steering column

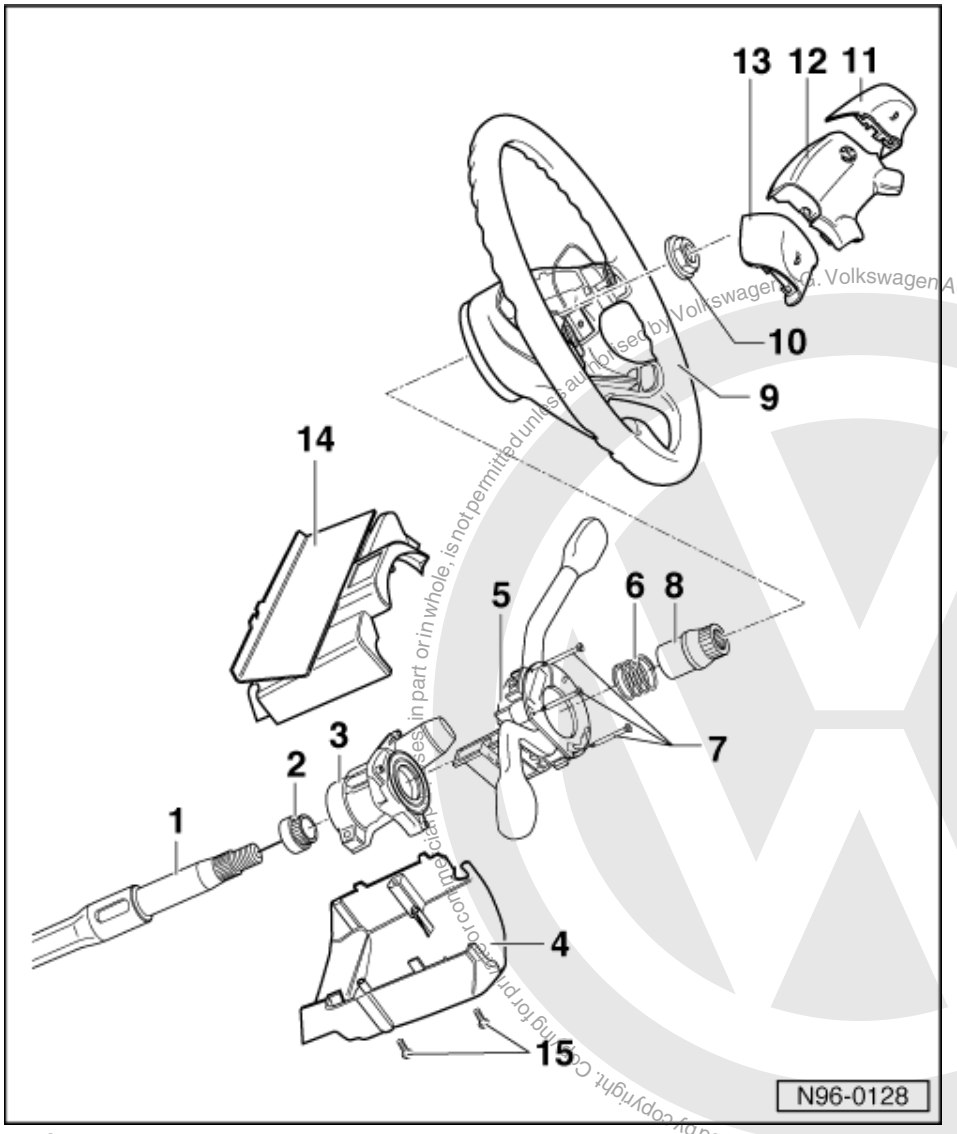


2 Support ring
3 Steering lock housing
- Removing and installing => Page 191
- Removing and installing lock cylinder => Page 191

4 Trim - lower part
5 Steering column switch
- For turn signals, main and dip beam, headlight flasher, parking lights, windscreen wiper, wash/wipe controls and rear window wiper
- Removing => Page 186 , Removing and installing steering column switch

Protected by copyright. Copying for private or commercial purposes, in part or in whole, is not permitted unless authorised by Volkswagen AG. Volkswagen AG does not guarantee or accept any liability with respect to the correctness of information in this document. Copyright by Volkswagen AG.
satelettronica

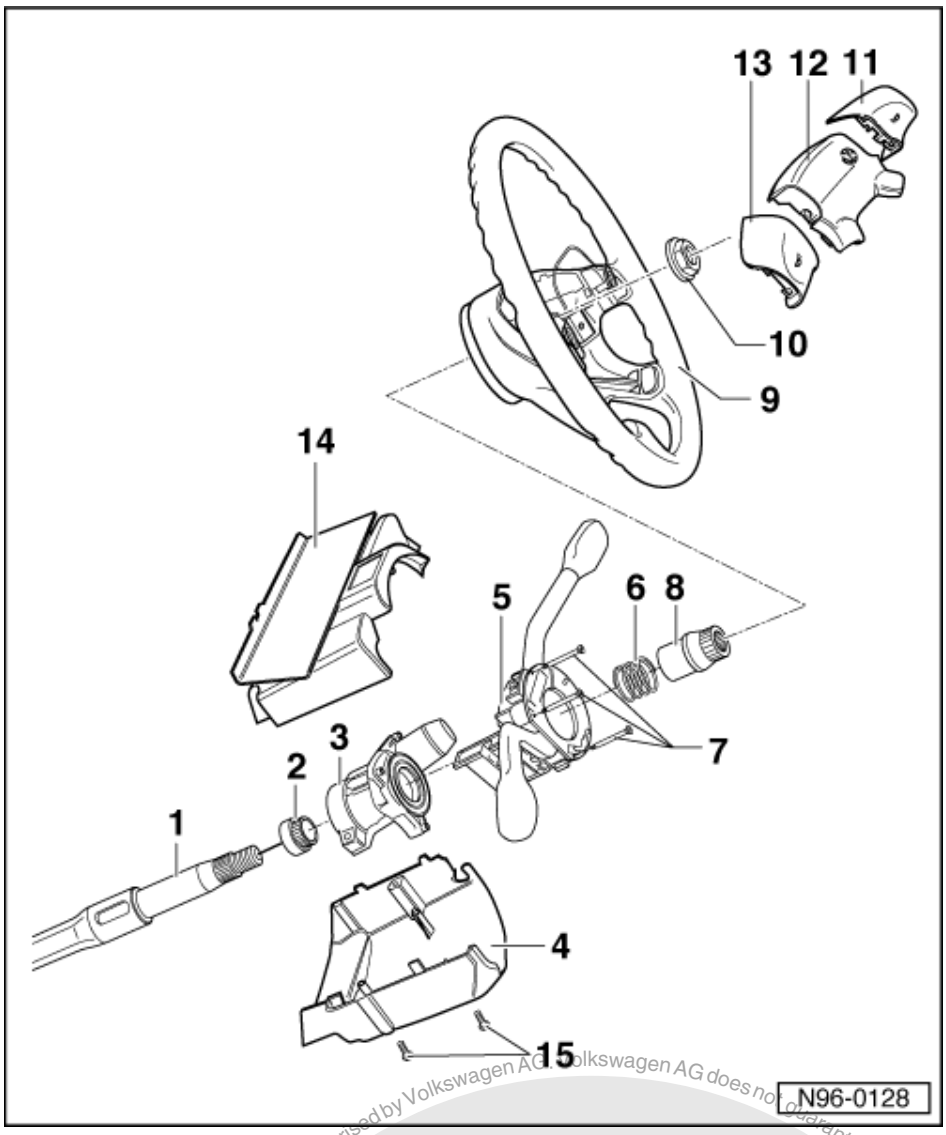


6 Spring
7 Steering column switch securing screws
8 Splined adapter sleeve
9 Steering wheel
- Grease contact ring for horn operation => Fig. 3

10 Hexagon nut
- 50 Nm

11 Right-hand horn push
- Removing horn push => Fig. 1

12 Airbag unit
- Removing and installing

=> General body repairs, interior; Repair group 69; Interior protection; Airbag Interior protection Airbag

Protected by copyright. Copying for private or commercial purposes, in part or in whole, is only permitted with the express authorised by Volkswagen AG. Volkswagen AG does not guarantee or accept any liability with respect to the correctness of information in this document. Copyright by Volkswagen AG.
satelettronica

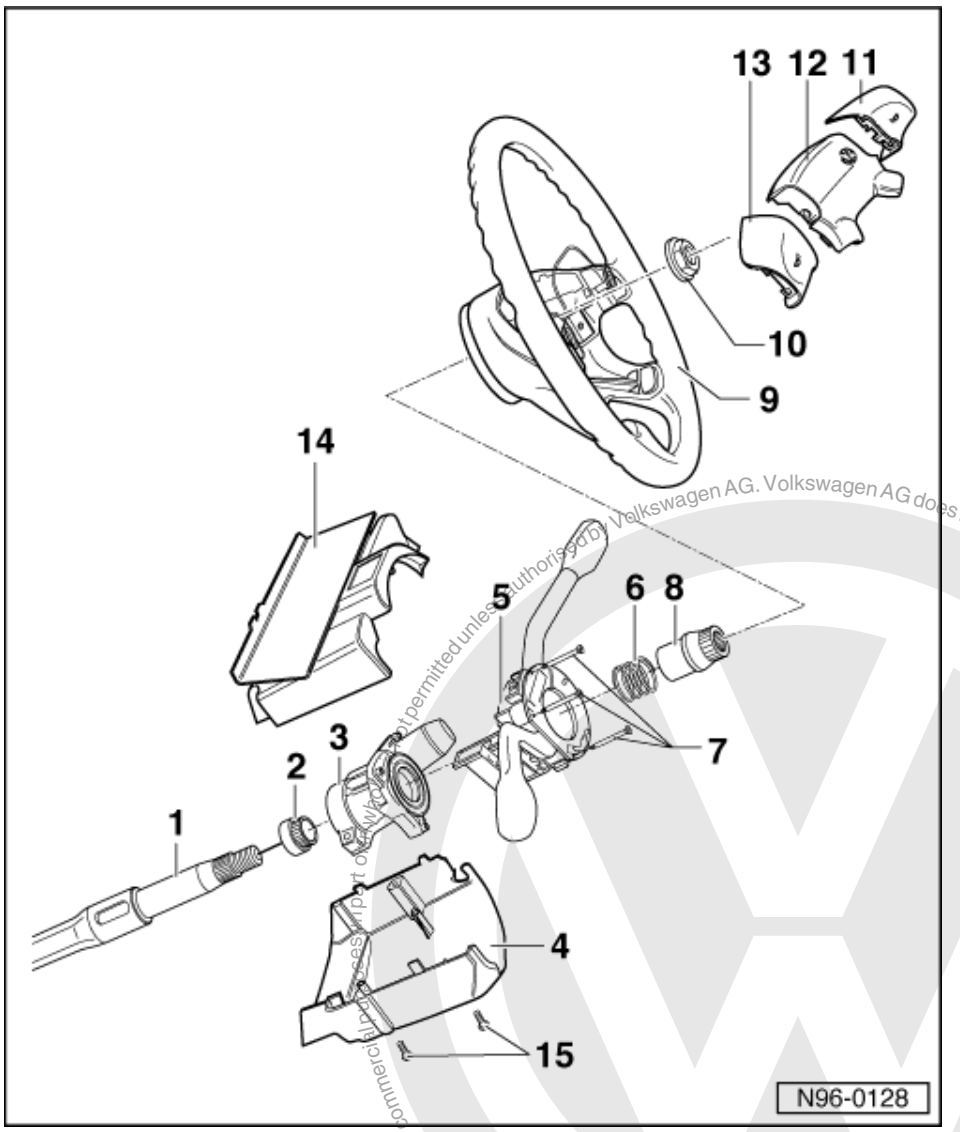


13 Left-hand horn push

- Removing horn push => Fig. 1

14 Trim - upper part

15 Steering screws for trim upper and lower parts

Protected by copyright. Copying for private or commercial purposes, in part or in whole, is not permitted unless authorised by Volkswagen AG. Volkswagen AG does not guarantee or accept any liability with respect to the correctness of information in this document. Copyright by Volkswagen AG.
satelettronica

## 8.3 - Assembly overview: Steering column, vehicles 10.99 >

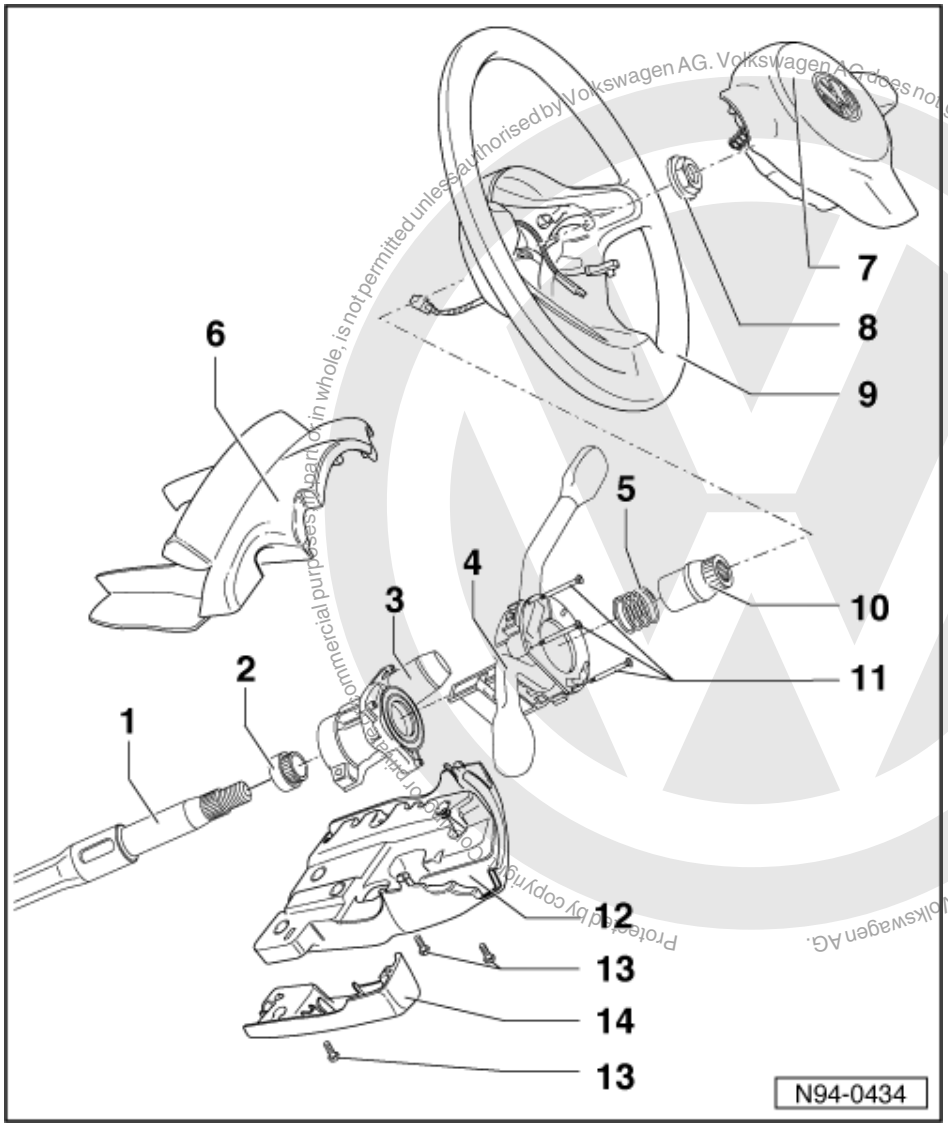


Protected by copyright. Copying for private or commercial purposes, in part or in whole, is not permitted unless authorised by Volkswagen AG. Volkswagen AG does not guarantee or accept any liability with respect to the correctness of information in this document. Copyright by Volkswagen AG.

satelettronica

Warning!
Always disconnect the battery earth strap before working on the electrical system.

*Notes:*

- Further information on assembling steering column

=> Running gear, axles, steering; Repair group 48; Steering; Airbag, steering wheel, steering column Steering Airbag, steering wheel, steering column

- Assembly instructions for vehicles with airbag

=> General body repairs, interior; Repair group 69; Interior protection; Airbag Interior protection Airbag

1 Steering column

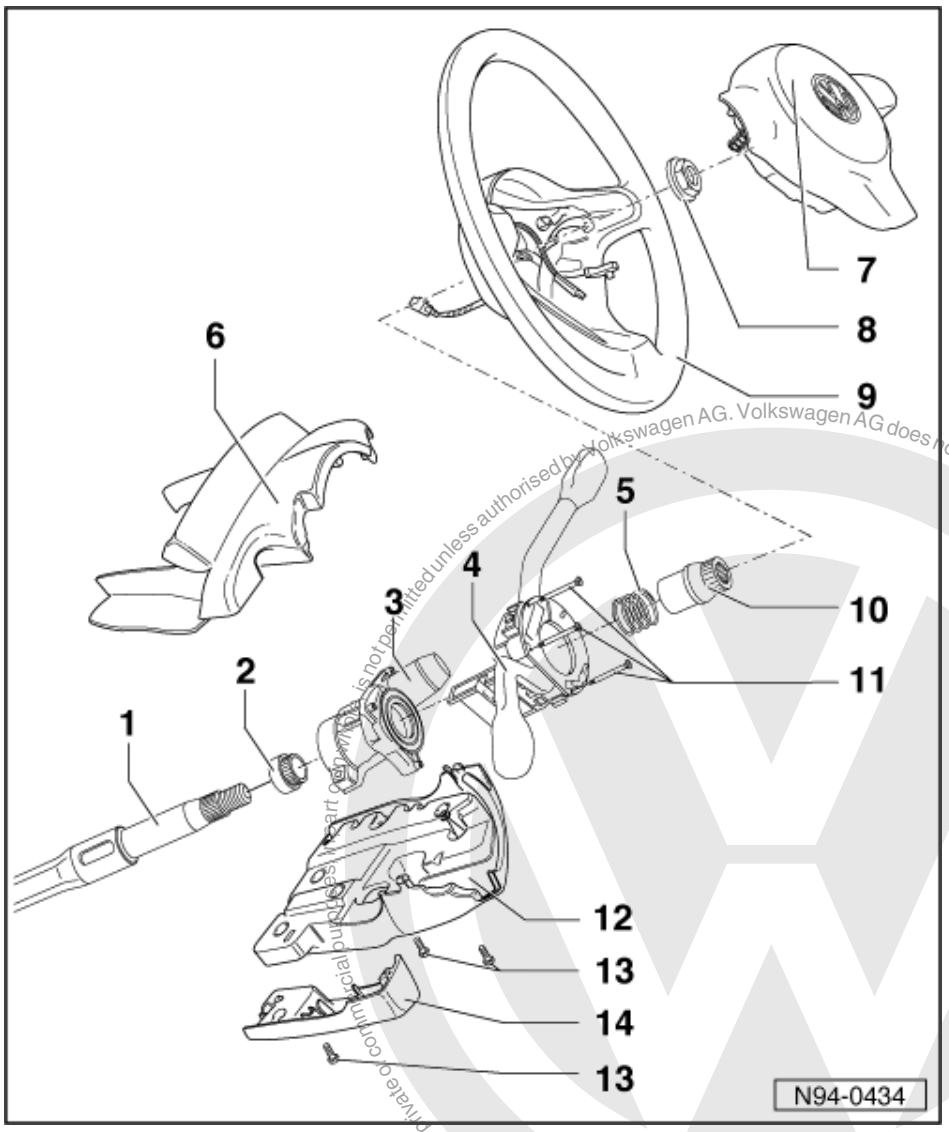


2 Support ring
3 Steering lock housing
- Removing and installing => Page 194
- Removing and installing lock cylinder => Page 197

4 Steering column switch
- For turn signals, main and dip beam, headlight flasher, parking lights, windscreen wiper, wash/wipe controls and rear window wiper
- Removing => Page 187 , Removing and installing steering column switch

5 Spring
6 Trim - upper part
7 Airbag unit
- Removing and installing

=> General body repairs, interior; Repair group 69; Interior protection; Airbag Interior protection Airbag

Protected by copyright. Copying for private or commercial purposes, in part or in whole, is not permitted unless authorised by Volkswagen AG. Volkswagen AG does not guarantee or accept any liability with respect to the correctness of information in this document. Copyright by Volkswagen AG.
satelettronica

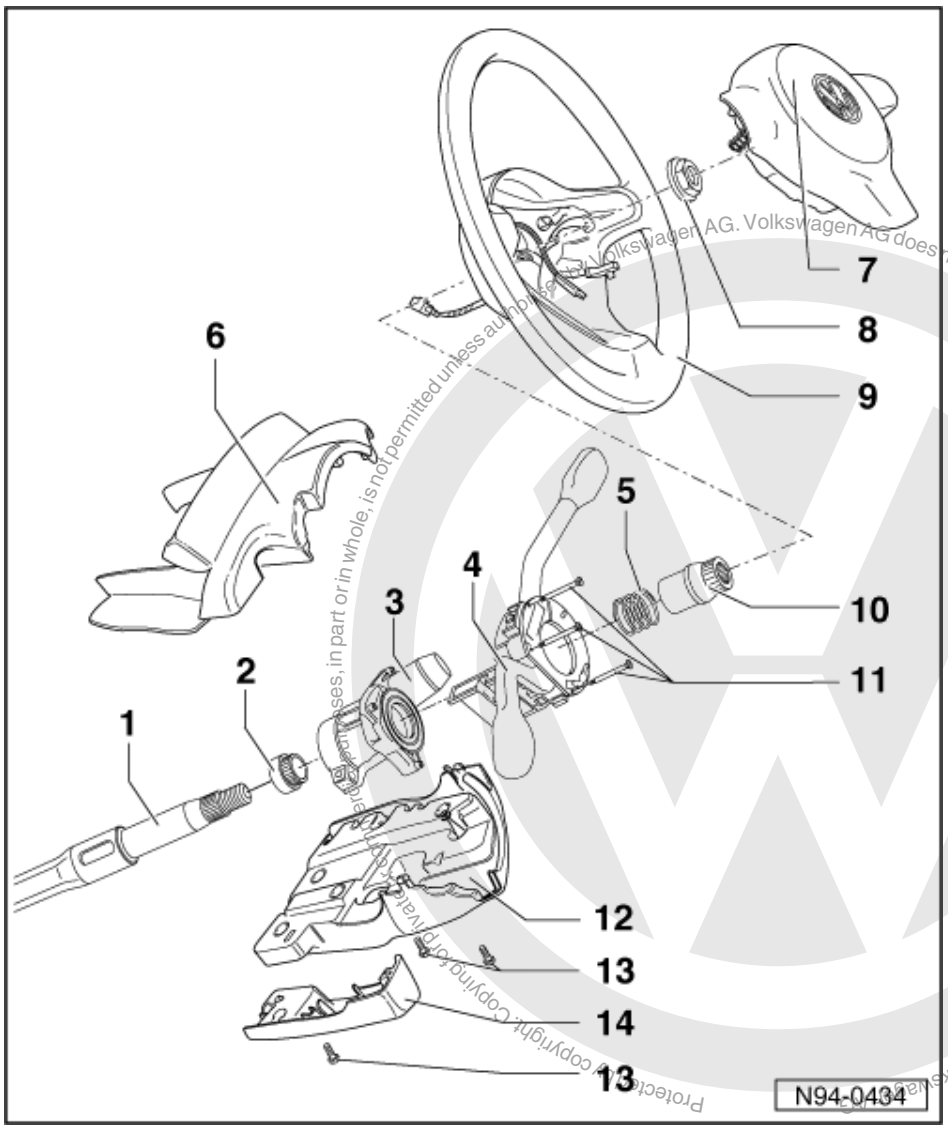


8 Hexagon nut
- 50 Nm

9 Steering wheel
- Grease contact ring for horn operation => Fig. 3

10 Splined adapter sleeve
11 Steering column switch securing screws
12 Trim - middle lower part
13 Securing screws for trim upper and lower parts
14 Trim - left lower part

Protected by copyright. Copyright by Volkswagen AG. Volkswagen AG does not guarantee or accept any liability with respect to the correctness of information in this document. Copyright by Volkswagen AG. Reproduction, in part or in whole, is not permitted unless authorised.
satelettronica

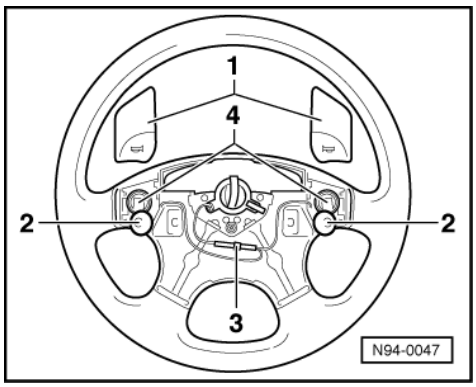


Fig.1 Removing and installing horn pushes steering wheel with airbag unit

1 - -> Horn pushes
2 - Contact discs
3 - Wiring connector
4 - Springs

To gain access to the wiring connector, the airbag unit must be removed

=> General body repairs; Repair group 69; Airbag Airbag

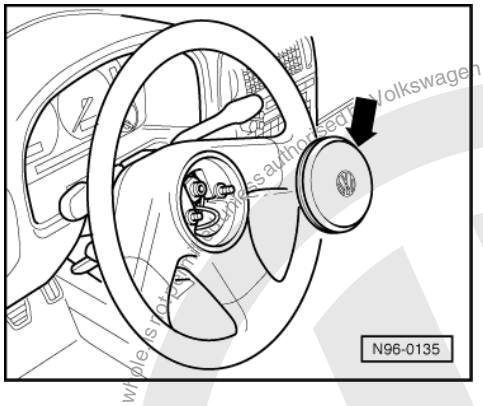


Fig. 2 Removing horn push on steering wheel without airbag unit, vehicles ▸ 09.99

- -> Lever up horn push with contact -arrow- at bottom and pull off steering wheel.

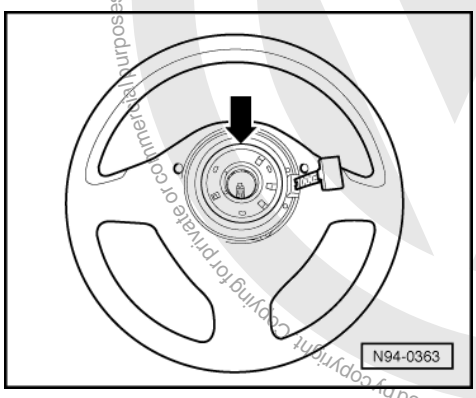


Fig.3 Slip ring for horn operation

- -> Grease slip ring -arrow- with G 000400 grease.

Protected by copyright. Copying for private or commercial purposes, in part or in whole, is not permitted unless authorised by Volkswagen AG. Volkswagen AG does not guarantee or accept any liability with respect to the correctness of information in this document. Copyright by Volkswagen AG.
satelettronica

## 8.4 - Removing and installing steering column switch, vehicles > 09.99

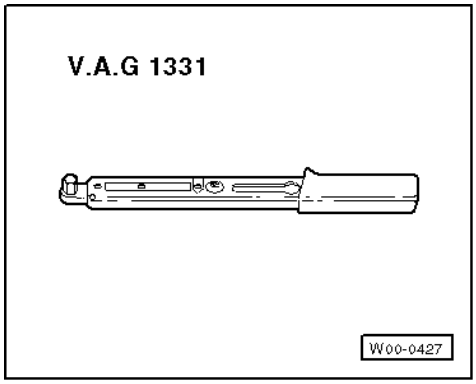


**Special tools, testers, measuring instruments and auxiliary items required**

- V.A.G 1331 Torque wrench (5 - 50 Nm)

**Removing steering column switch**

Warning!
Before working on the electrical system disconnect the battery earth strap.

***Notes:***

- If the vehicle has a security-coded radio, obtain the correct anti-theft code number before disconnecting the battery.
- When the battery is reconnected, check operation of electrical equipment (radio, clock and electric window lifters) according to Workshop Manual or Owner's Manual.

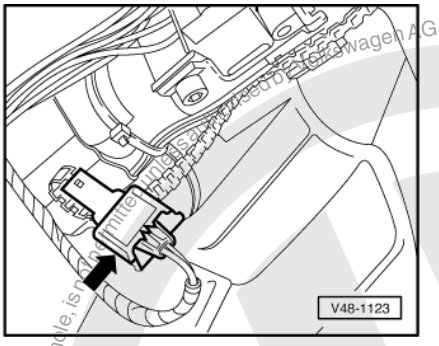


- Remove driver's airbag.

=> General body repairs, interior; Repair group 69; Interior protection; Airbag Interior protection Airbag

- Take off lower steering column switch trim.
- -> Separate connector -arrow- from resetting unit.
- Pull connector off steering lock housing.

- Remove hexagon nut, align steering so that steering wheel is centred and pull steering wheel off steering column.
- Take off upper steering column switch trim.

Protected by copyright. Copying for private or commercial purposes, in part or in whole, is not permitted unless authorised by Volkswagen AG. Volkswagen AG does not guarantee or accept any liability with respect to the correctness of information in this document. Copyright by Volkswagen AG.

satelettronica

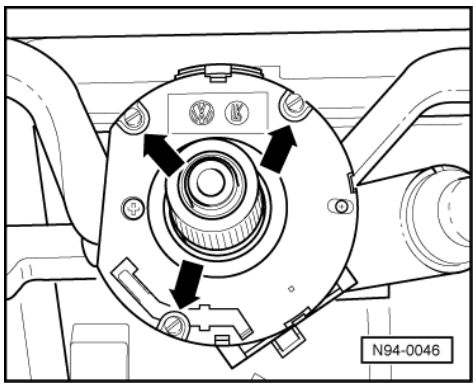


- -> Remove securing screws -arrows-.
- Separate connector to turn signal and windscreen wiper switch.
- Pull turn signal and windscreen wiper switch off the steering column.

**Installing steering column switch**

Install in reverse order.

- Install driver's side airbag.

=> General body repairs; Repair group 69

## 8.5 - Removing and installing steering column switch, vehicles 10.99 >

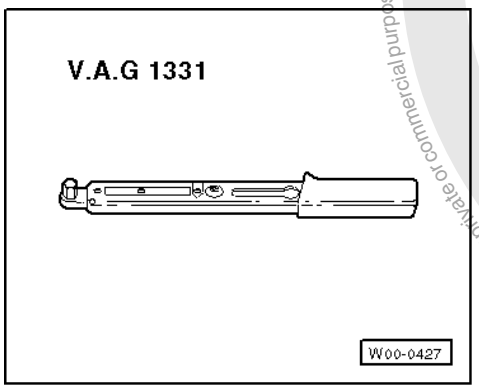


**Special tools, testers, measuring instruments and auxiliary items required**

- V.A.G 1331 Torque wrench (5 - 50 Nm)

**Removing steering column switch**

| |
|---|
| Warning!<br>Before working on the electrical system disconnect the battery earth strap. |

*Notes:*

- If the vehicle has a security-coded radio, obtain the correct code number from the customer before disconnecting the battery.
- When the battery is reconnected, check operation of vehicle electrical equipment (radio, clock and electric windows etc.) according to Workshop Manual or Owner's Manual.

Protected by copyright. Copying for private or commercial purposes, part or in whole, is not permitted unless authorised by Volkswagen AG. Volkswagen AG does not guarantee or accept any liability with respect to the correctness of information in this document. Copyright by Volkswagen AG.
satelettronica

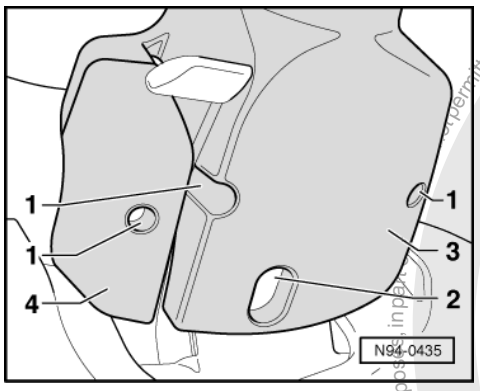


- Remove driver's airbag.

=> General body repairs, interior; Repair group 69; Interior protection; Airbag Interior protection Airbag

- -> Remove two cross-head screws -1-.
- Remove Torx screw -2-.
- Take off lower -3- and side -4- steering column switch trim.

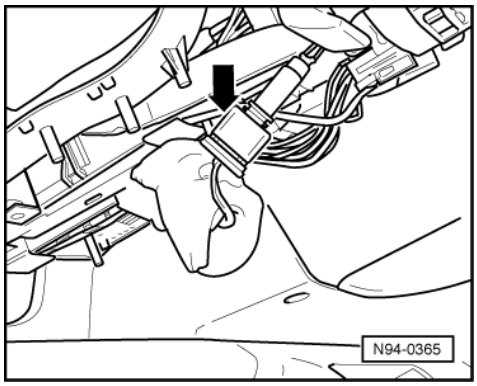


- -> Separate connector -arrow- for resetting unit.

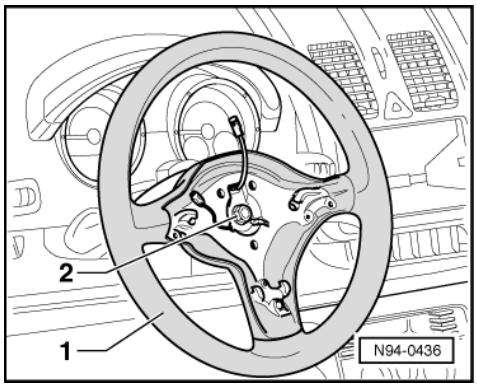


- -> Remove hexagon bolt (50 Nm) -2-.
- Position steering wheel -1- in central position (wheels straight ahead).
- Pull steering wheel -1- off steering column.

Protected by copyright. Copying for private or commercial purposes, in part or in whole, is not permitted unless authorised by Volkswagen AG. Volkswagen AG does not guarantee or accept any liability with respect to the correctness of information in this document. Copyright by Volkswagen AG.
satelettronica

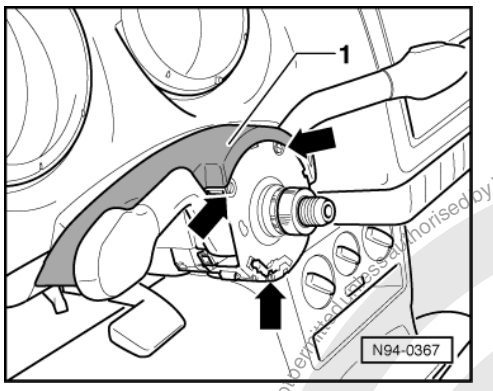


- -> Take upper steering column switch trim -1- off.
- Remove securing screws -arrows-.

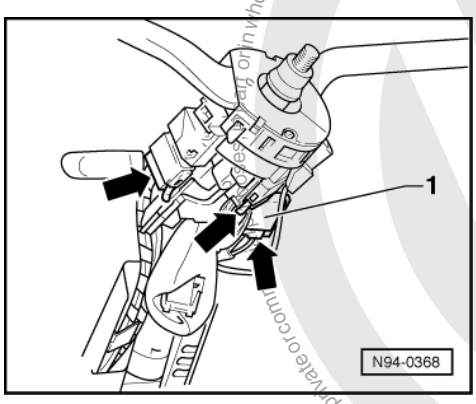


- -> Pull connectors -arrows- off steering column switch.
- Take connector housing -1- downwards out of guide on steering lock housing.
- Take off steering column switch.

**Installing steering column switch**

Install in reverse order.

- Remove driver's airbag unit.

=> General body repairs, interior; Repair group 69; Interior protection; Airbag Interior protection Airbag

Protected by copyright. Copyright by Volkswagen AG.
Copying for private or commercial purposes, in whole or in part, is not permitted unless authorised by Volkswagen AG. Volkswagen AG does not guarantee or accept any liability with respect to the correctness of information in this document.
satelettronica

## 8.6 - Wiring connections on steering column switches

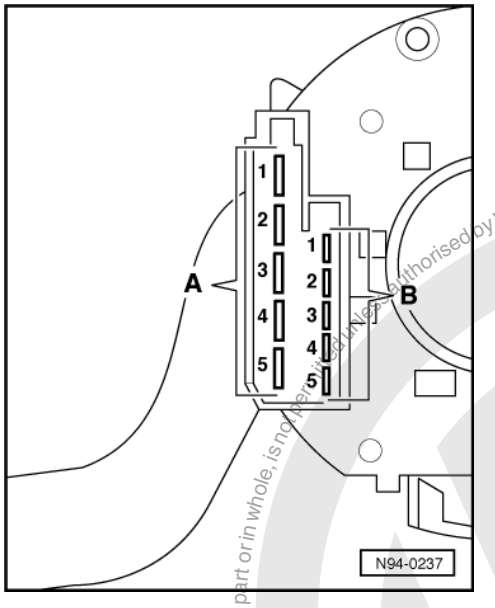


A - Connector, 5 pin

1 - Vacant
2 - Switch for dip/flasher - terminal 56b
3 - Switch for dip/flasher - terminal 56
4 - Switch for dip/flasher - terminal 56a
5 - Switch for dip/flasher - terminal 30

B - Connector, 5 pin

1 - Windscreen wiper switch - terminal 53b
2 - Windscreen wiper switch - terminal 53a
3 - Windscreen wiper switch - terminal 53
4 - Windscreen wiper switch - terminal 53e
5 - Windscreen wiper switch - intermittent operation

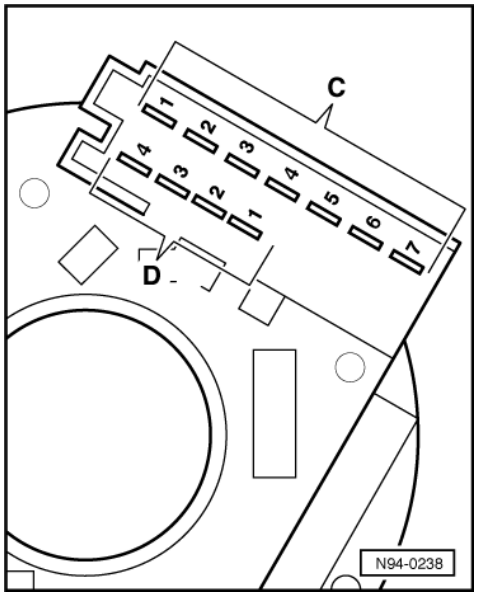


C - Connector, 7 pin

1 - Horn plate - terminal 71

Protected by copyright. Copying for private or commercial purposes, in part or in whole, is not permitted unless authorised by Volkswagen AG. Volkswagen AG does not guarantee or accept any liability with respect to the correctness of information in this document. Copyright by Volkswagen AG.
satelettronica

2 - Turn signal switch - terminal 49a
3 - Turn signal switch - terminal L
4 - Parking light switch - terminal PL
5 - Parking light switch - terminal P
6 - Parking light switch - terminal PR
7 - Turn signal switch - terminal R

**D - Connector, 4 pin**

1 - Windscreen wiper switch - rear window wiper
2 - Windscreen wiper switch - flick operation
3 - Windscreen wiper switch - terminal 31
4 - Windscreen wiper switch - terminal 15, not used

## 8.7 - Removing and installing steering lock housing, vehicles > 09.99

**Special tools, testers, measuring instruments and auxiliary items required**

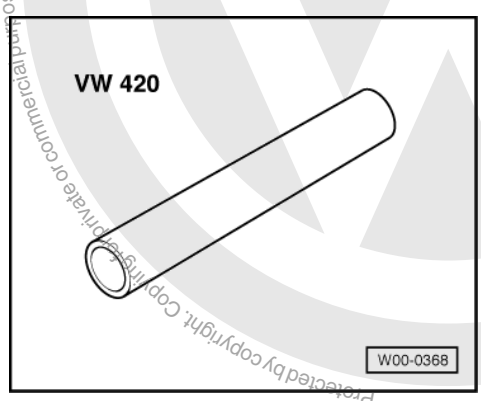


- VW 420 Tube
- Puller (e.g. Kukko 204/2)

Warning!
Before working on the electrical system disconnect the battery earth strap.

*Notes:*

- If the vehicle has a security-coded radio, obtain the correct anti-theft code number before disconnecting the battery.
- When the battery is reconnected, check operation of electrical equipment (radio, clock and electric window lifters) according to Workshop Manual or Owner's Manual.

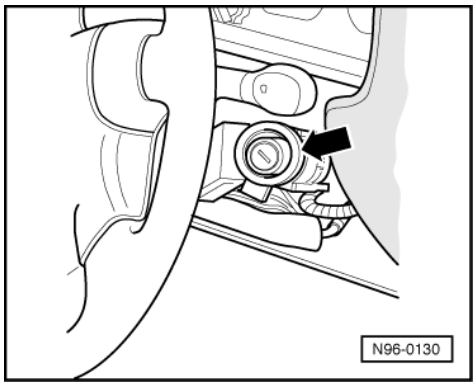


Protected by copyright. Copying for private or commercial purposes, in part or in whole, is not permitted unless authorised by Volkswagen AG. Volkswagen AG does not guarantee or accept any liability with respect to the correctness of information in this document. Copyright by Volkswagen AG.
satelettronica

Removing steering lock housing

- Remove steering column switch => Page 186 .

Vehicles with removable immobilizer reader coil:

- -> Pull reader coil -arrow- off steering lock housing.

Vehicles with immobilizer reader coil securely attached to lock cylinder:

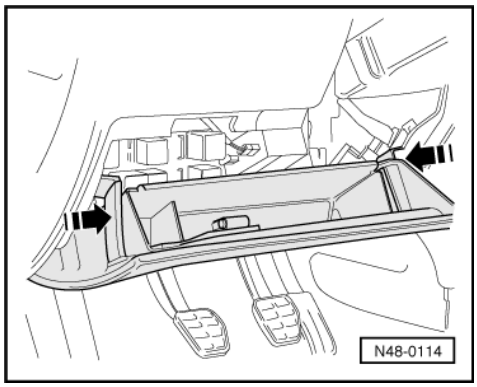


- -> Press stowage compartment retaining lugs together in direction of arrows.
- Fold stowage compartment down and pull out to rear.

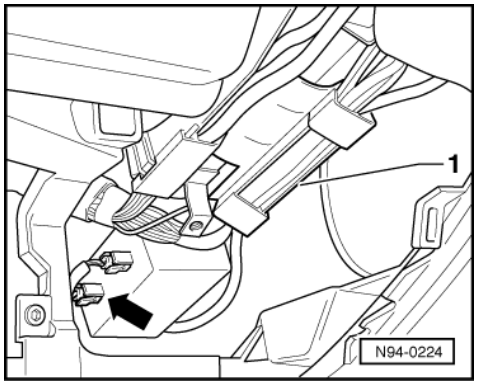


- -> Pull immobilizer reader coil connector -arrow- carefully off immobilizer control unit.
- Take reader coil cable out from cable guide -1-.

Continued for all vehicles:

- Pull multi-pin connector off ignition/starter switch.

Vehicles with automatic gearbox

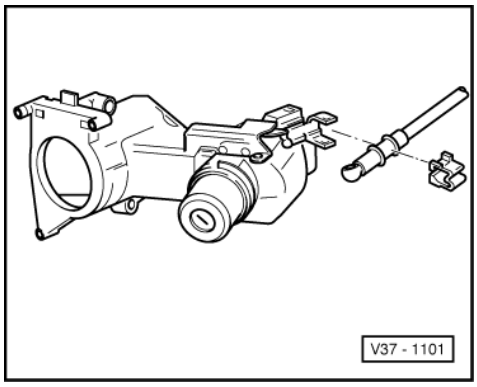


- -> Pull clip off and unclip locking cable for ignition key removal lock.

Protected by copyright. Copying for private or commercial purposes, in part or in whole, is not permitted unless authorised by Volkswagen AG. Volkswagen AG does not guarantee or accept any liability with respect to the correctness of information in this document. Copyright by Volkswagen AG.
satelettronica

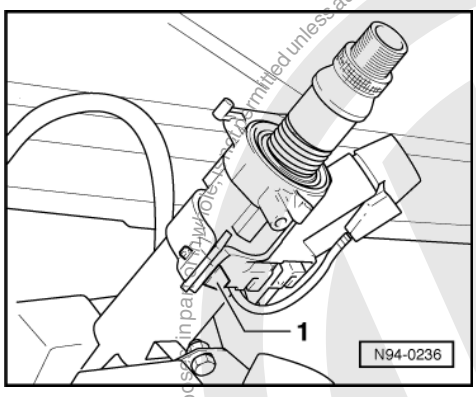


Continued for all vehicles:

- -> Drill out shear bolts -1- or chisel off if necessary.

Warning!
Wear protective goggles.

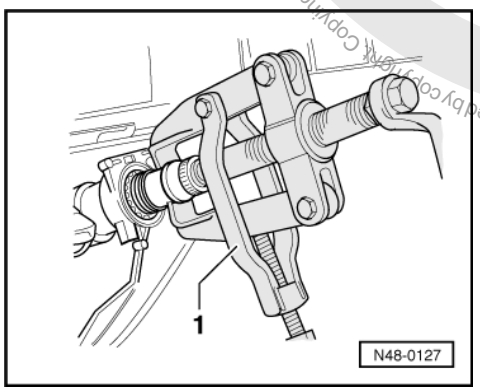


- -> Pull off spline adapter sleeve using commercially available puller -1- (e.g. B. Kukko 204/2).
- Pull steering lock housing and spring off column tube and steering column.

**Installing steering lock housing**

- Slide steering lock housing and spring onto steering column (note installation position).

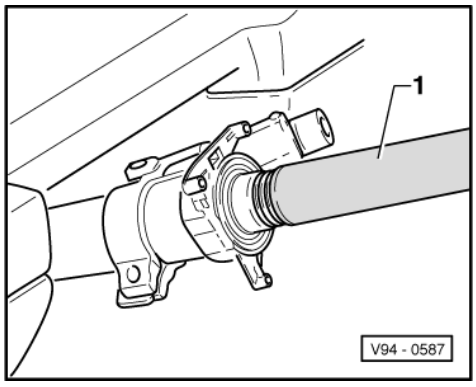


- Remove ignition key and engage steering lock.
- -> Drive multi-spline adapter sleeve onto steering column with tool VW 420 -1-.
- Connect multi-pin connector to ignition/starter switch.
- Fit reader coil or connect immobilizer control unit connector.
- Tighten shear bolt for steering lock housing until head shears off.

Protected by copyright. Copying for private or commercial purposes, in part or in whole, is not permitted unless authorised by Volkswagen AG. Volkswagen AG does not guarantee or accept any liability with respect to the correctness of information in this document. Copyright by Volkswagen AG.
satelettronica

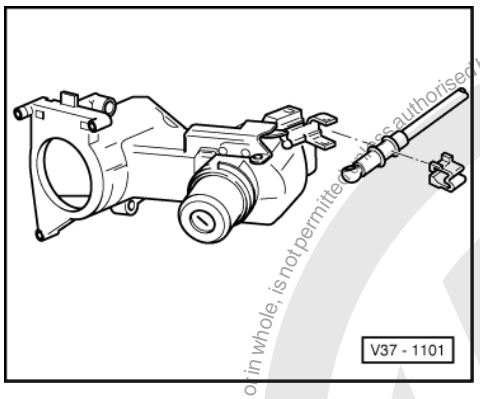


Vehicles with automatic gearbox

- -> Fit locking cable clip onto locking cable.
- Press locking cable onto ball head.
- Press locking cable with clip into ignition switch support bracket.

Continued for all vehicles:

- Install steering column switch => Page 186 .
- Install driver's stowage compartment.

## 8.8 - Removing and installing steering lock housing, vehicles 10.99 >

### Special tools, testers, measuring instruments and auxiliary items required

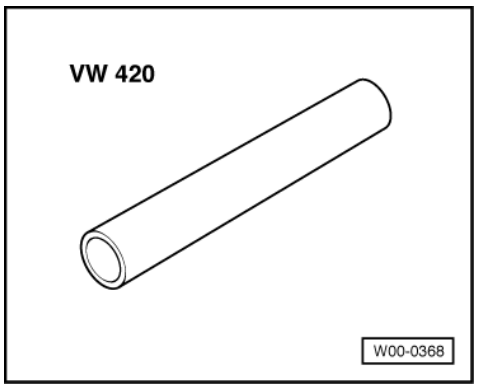


- VW 420 Tube
- Puller (e.g. Kukko 204/2)

| |
|---|
| Warning!<br>Before working on the electrical system disconnect the battery earth strap. |

*Notes:*

- If the vehicle has a security-coded radio, obtain the correct code number from the customer before disconnecting the battery.
- When the battery is reconnected, check operation of vehicle electrical equipment (radio, clock and electric windows etc.) according to Workshop Manual or Owner's Manual.

### Removing steering lock housing

- Remove steering column switch => Page 187 .

satelettronica

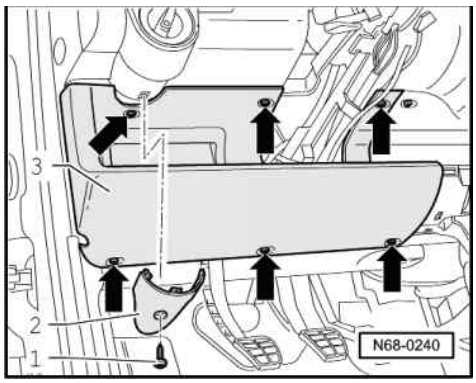


- -> Remove screw -1- and take off cover -2-.
- Remove driver's stowage compartment -3- securing screws -arrows-.
- Take out driver's stowage compartment -3-.
- Pull multi-pin connector off ignition/starter switch.

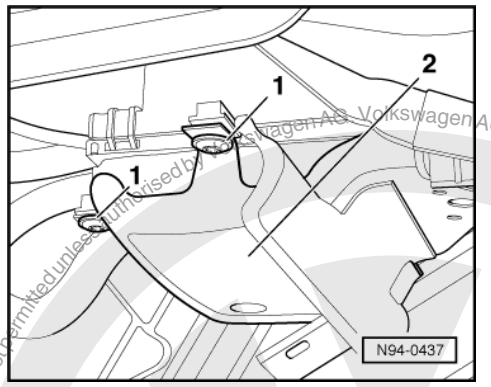


- -> Unscrew Torx screws -1- and remove covering for cable channel -2-.
- Pull immobilizer reader coil connector carefully off immobilizer control unit.

Vehicles with automatic gearbox

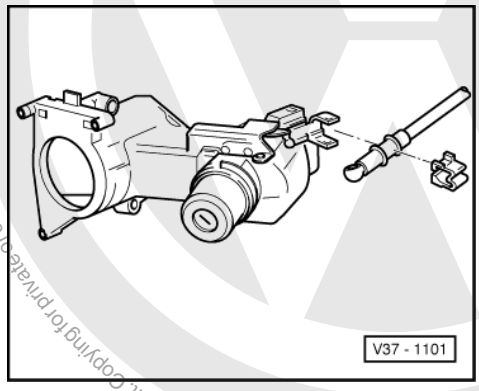


- -> Pull clip off and unclip locking cable for ignition key removal lock.

Protected by copyright. Copying for private or commercial purposes, in part or in whole, is not permitted unless authorised by Volkswagen AG. Volkswagen AG does not guarantee or accept any liability with respect to the correctness of information in this document. Copyright by Volkswagen AG.
satelettronica

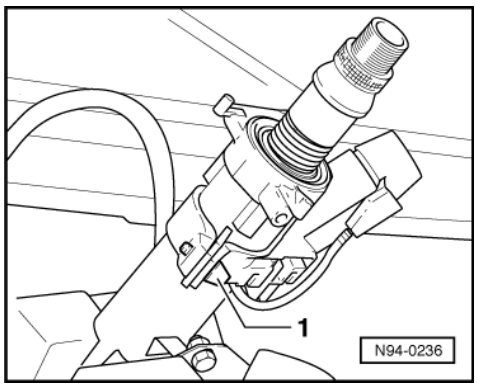


Continued for all vehicles:

- -> Drill out shear bolts -1- or chisel off if necessary.

| |
|---|
| Warning!<br>Wear protective goggles. |

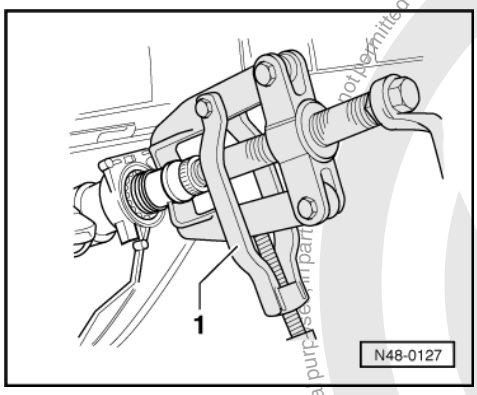


- -> Pull off multi-spline adapter sleeve with commercially available puller -1- (e.g. Kukko 204/2).
- Pull steering lock housing and spring off column tube and steering column.

**Installing steering lock housing**

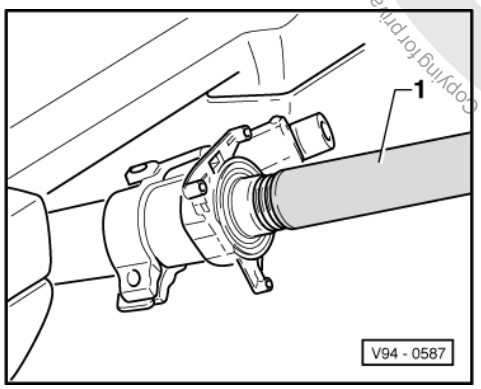


- Slide steering lock housing and spring onto steering column (note installation position).
- Remove ignition key and engage steering lock.
- -> Drive multi-spline adapter sleeve onto steering column with tool VW 420 -1-.
- Connect multi-pin connector to ignition/starter switch.
- Tighten shear bolt for steering lock housing until head shears off.

Vehicles with automatic gearbox

Protected by copyright. Copying for private or commercial purposes, in part or in whole, is not permitted unless authorised by Volkswagen AG. Volkswagen AG does not guarantee or accept any liability with respect to the correctness of information in this document. Copyright by Volkswagen AG.
satelettronica

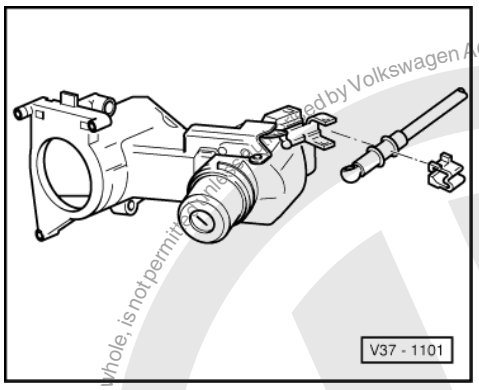


- -> Fit locking cable clip onto locking cable.
- Press locking cable onto ball head.
- Press locking cable with clip into ignition switch support bracket.

Continued for all vehicles:
- Install steering column switch=> Page 189 .
- Install driver's stowage compartment.

## 8.9 - Removing and installing lock cylinder, vehicles >09.99

### Removing lock cylinder
- Remove lock cylinder housing => Page 191 .

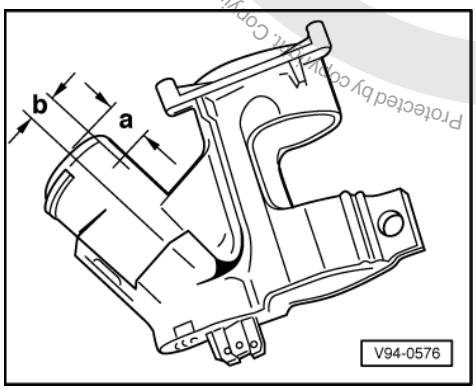


Vehicles with removable immobilizer reader coil:
- -> Mark steering lock housing for drilling

a - 12 mm
b - 10 mm

Vehicles with immobilizer reader coil securely attached to lock cylinder:

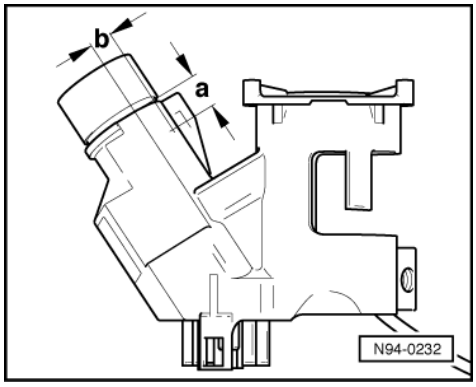


Protected by copyright. Copying for private or commercial purposes, in part or in whole, is not permitted unless authorised by Volkswagen AG. Volkswagen AG does not guarantee or accept any liability with respect to the correctness of information in this document. Copyright by Volkswagen AG.
satelettronica

Protected by copyright. Copying for private or commercial purposes, in part or in whole, is not permitted unless authorised by Volkswagen AG. Volkswagen AG does not guarantee or accept any liability with respect to the correctness of information in this document. Copyright by Volkswagen AG.

- -> Mark steering lock housing for drilling

  a - 9.5 mm
  b - 10 mm

Continued for all vehicles:

- Drill steering lock housing (approx. 3 mm), until the lock cylinder spring is evident.
- Using opposite end of drill compress lock spring and pull out lock cylinder.

**Installing lock cylinder**

| |
|---|
| Warning!<br>Steering lock housing with drilling must not be installed again. |

- Push lock cylinder into new steering lock housing.
- By slightly turning key in lock cylinder it can be pushed onto the stop.
- Install steering lock housing => Page 193 .

## 8.10 - Removing and installing lock cylinder, vehicles 10.99 >

**Removing lock cylinder**

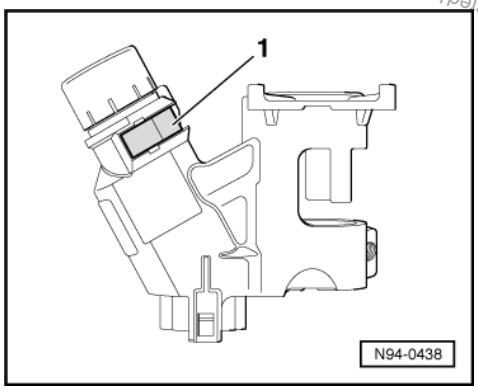


- Remove steering lock housing => Page 194 .
- -> Release clip -1- on steering lock housing.

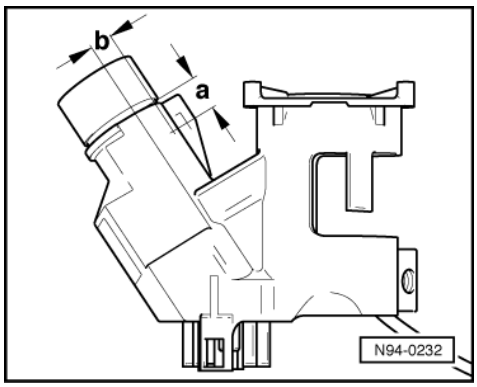


- -> Mark steering lock housing for drilling

  a - 9.5 mm
  b - 10 mm

- Drill steering lock housing (approx. 3 mm), until the lock cylinder spring is evident.

satelettronica

- Using opposite end of drill compress lock spring and pull out lock cylinder.

**Installing lock cylinder**

Warning!
Steering lock housing with drilling must not be installed again.

- Push lock cylinder into new steering lock housing.
- By slightly turning key in lock cylinder it can be pushed onto the stop.
- Install steering lock housing => Page 193 .

## 8.11 - Removing and installing ignition/starter switch

Warning!
Before working on the electrical system disconnect the battery earth strap.

***Notes:***

- If the vehicle has a security-coded radio, obtain the correct anti-theft code number before disconnecting the battery.
- When the battery is reconnected, check operation of electrical equipment (radio, clock and electric window lifters) according to Workshop Manual or Owner's Manual.

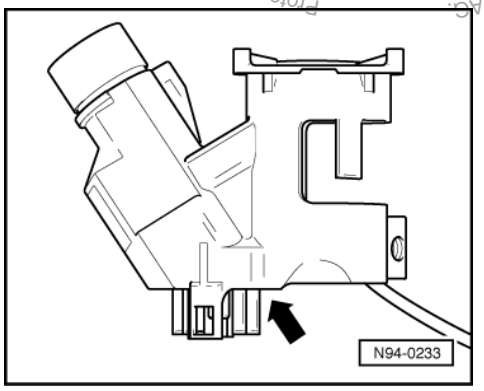


**Removing ignition/starter switch:**

- Remove steering lock housing, vehicles ‣ 09.99 => Page 192 .
- Remove steering lock housing, vehicles 10.99 ‣ => Page 194 .
- -> Loosen the securing screw -arrow- and pull ignition/starter switch out from steering lock housing.

**Installing ignition/starter switch**

- Push ignition/starter switch into steering lock housing.

***Note:***

*When installing the ignition/starter lock switch ensure that the ignition/starter lock switch and the lock cylinder are in the same position, e.g. "ignition on".*

- Tighten securing screw.
- Install steering lock housing, vehicles ‣ 09.99 => Page 193 .
- Install steering lock housing, vehicles 10.99 ‣ => Page 196 .

Protected by Copyright. Volkswagen AG. Volkswagen AG does not guarantee or accept any liability with respect to the correctness of information in this document. Copyright by Volkswagen AG. Not to be reproduced, stored or distributed for commercial purposes, in part or in whole, is not permitted unless authorised by Volkswagen AG.
satelettronica

## 8.12 - Connector pin assignment on steering column switch

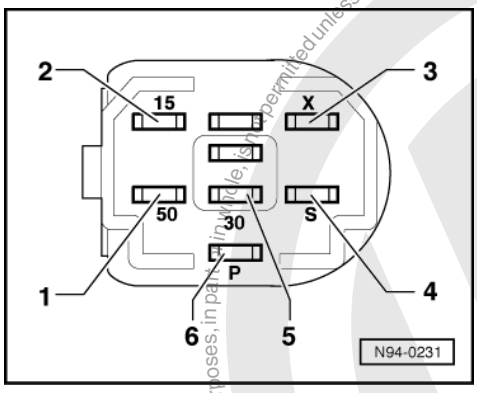


-> Connector, 8 pin

1 - Terminal 50
2 - Terminal 15
3 - Terminal X
4 - Terminal S
5 - Terminal 30
6 - Terminal P

Protected by copyright. Copying for private or commercial purposes, in part or in whole, is not permitted unless authorised by Volkswagen AG. Volkswagen AG does not guarantee or accept any liability with respect to the correctness of information in this document. Copyright by Volkswagen AG.
satelettronica

# 96 - Lights, Lamps, Switches - interior

## 1 - Immobilizer

### 1.1 - Immobilizer

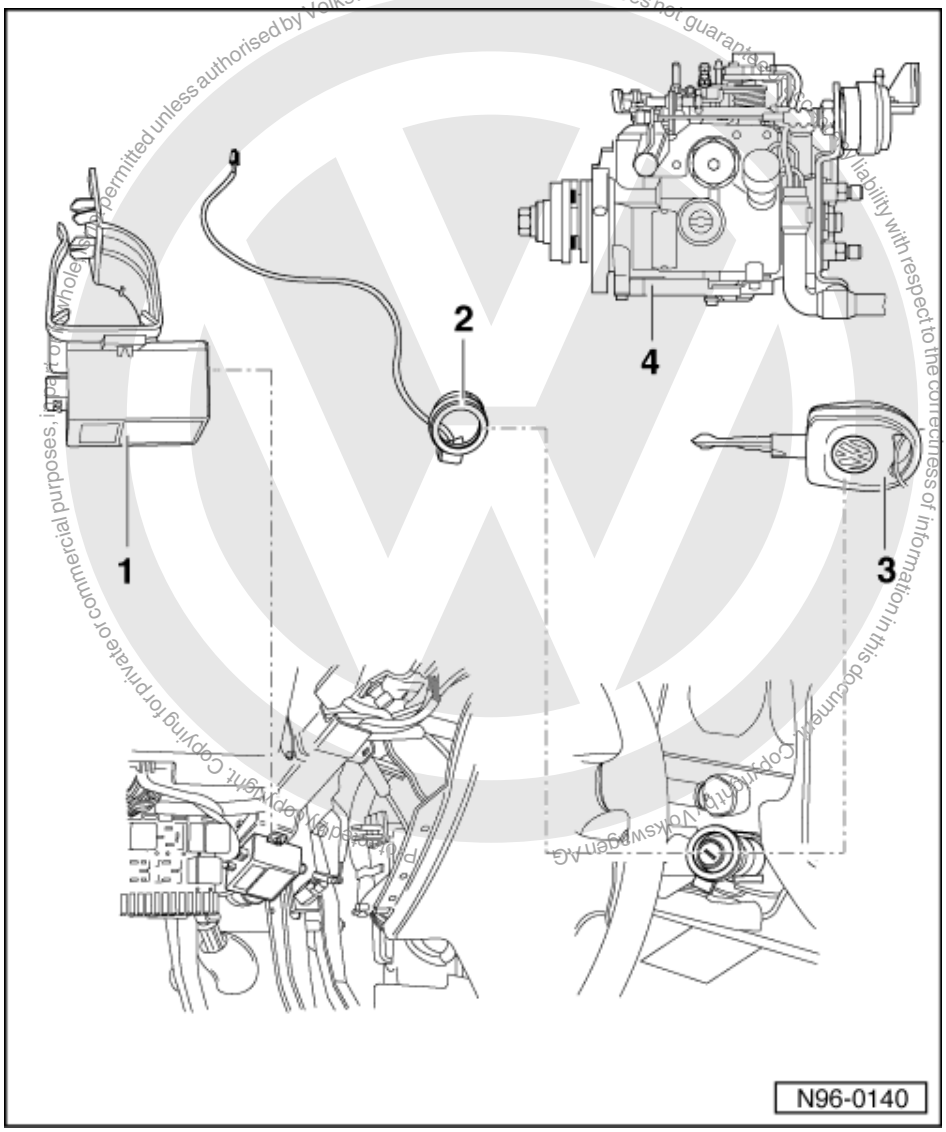


### 1.2 - Assembly overview: Immobilizer, vehicles > 09.99

1 Immobilizer control unit -J362-
Removing and installing => Page 202
2 Immobilizer reader coil -D2-
Removing and installing => Page 204
3 Transponder (response-reader memory) integrated in ignition key
4 Fuel cut-off valve control unit on Diesel injection pump

satelettronica

If defective the complete Diesel injection pump with the fuel cut-off valve control unit is to be replaced.

## 1.3 - Assembly overview: Immobilizer, vehicles 10.99 >

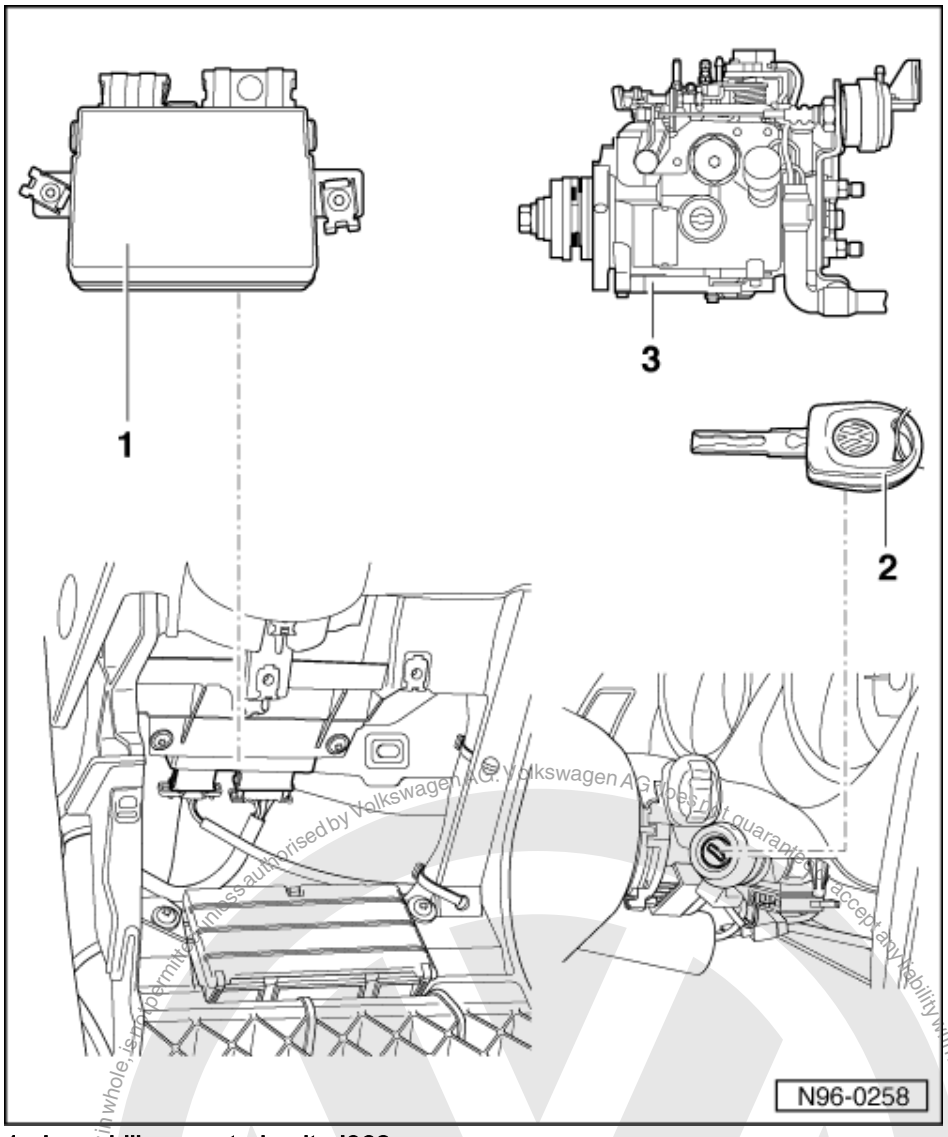


1 **Immobilizer control unit -J362-**
Removing and installing => Page 203
2 **Transponder (response-reader memory) integrated in ignition key**
3 **Fuel cut-off valve control unit on Diesel injection pump**
If defective the complete Diesel injection pump with the fuel cut-off valve control unit is to be replaced.

## 1.4 - Removing and installing immobilizer control unit, vehicles > 09.99

The electronic immobilizer control unit - J362- is located on the steering column under the dash panel.

satelettronica
Protected by copyright. Copying for private or commercial purposes, in whole, is not permitted unless authorised by Volkswagen AG. Volkswagen AG does not guarantee or accept any liability with respect to the correctness of information in this document. Copyright by Volkswagen AG.

## 1.5 - Removing and installing immobilizer control unit, vehicles 10.99 >

Protected by copyright. Copyright by Volkswagen AG. Volkswagen AG does not guarantee or accept any liability with respect to the correctness of information in this document. Copyright by Volkswagen AG.

**Removing:**

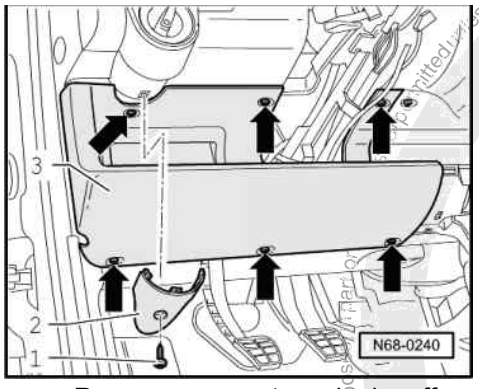


- -> Remove screw -1- and take off cover -2-.
- Remove driver's stowage compartment -3- securing screws -arrows-.
- Take out driver's stowage compartment -3-.

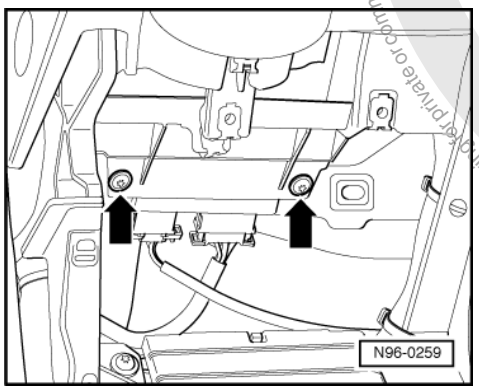


- -> Remove Torx screws -arrows- which secure the immobilizer control unit.

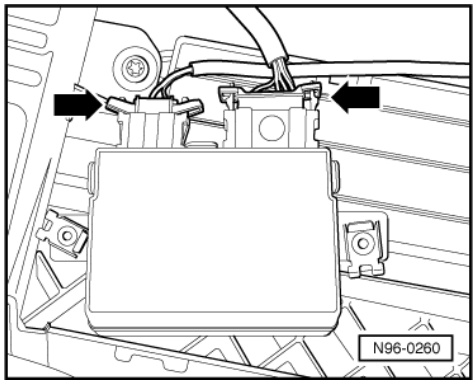


- -> Pull connectors -arrows- off immobilizer control unit.
- The immobilizer control unit can now be pulled out forwards.

**Installing:**

Install in reverse order.

satelettronica

## 1.6 - Removing and installing immobilizer reader coil -D2-, vehicles > 09.99

*Note:*

*The immobilizer reading coil is secured to the lock cylinder and cannot be changed individually on newer vehicles.*

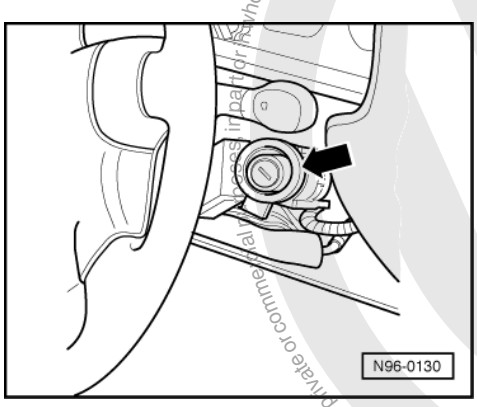


- Remove steering column switch upper and lower trim sections.
- Pull connector off immobilizer control unit.
- -> Pull reader coil off steering lock housing.

## 1.7 - Removing and installing immobilizer reader coil -D2-, vehicles 10.99 >

The immobilizer reader coil is secured to the steering lock housing and cannot be changed as an individual item.

## 1.8 - Transponder

Exchanging transponder (Response reader memory) in ignition coil is not possible.

The complete key must be replaced if the transponder is defective.

=> Repair group 01

Protected by copyright. Copyright by Volkswagen AG. Volkswagen AG does not guarantee or accept any liability with respect to the correctness of information in this document. Copyright by Volkswagen AG. Reproduction in part or in whole, in any form or medium, for private or commercial purposes is not permitted unless authorised by Volkswagen AG.
satelettronica

# 2 - Interior lights and switches

## 2.1 - Interior lights and switches

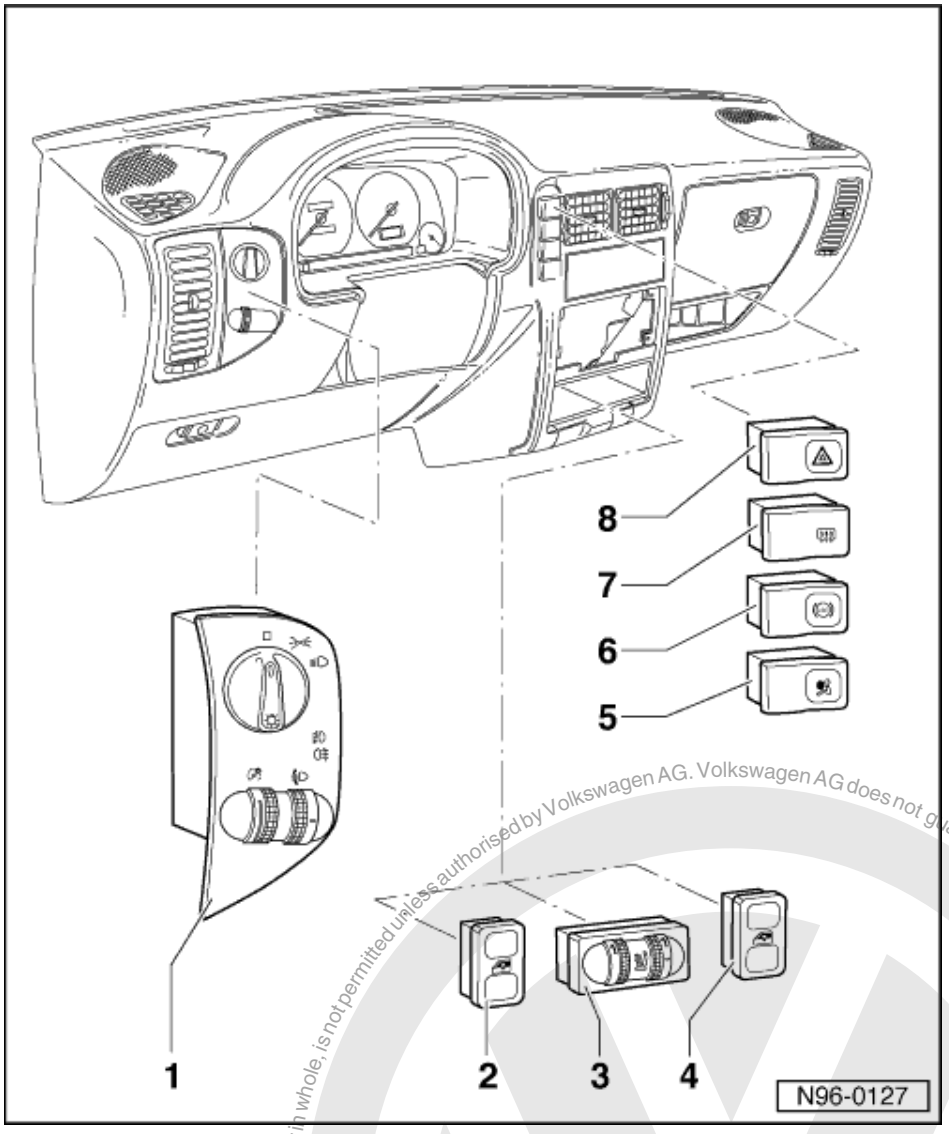


## 2.2 - Removing and installing switches in dash panel, vehicles > 09.99

1 Lighting switch -E1-

Multi-pin switch for side and driving lights, front and rear fog lights for vehicles with electric headlight range control

- Removing and installing => Page 210

2 Front left window switch -E40-

- Removing and installing => Page 212

Protected by copyright. Copying for private or commercial purposes, in part or in whole, is not permitted unless authorised by Volkswagen AG. Volkswagen AG does not guarantee or accept any liability with respect to the correctness of information in this document. Copyright by Volkswagen AG.
satelettronica

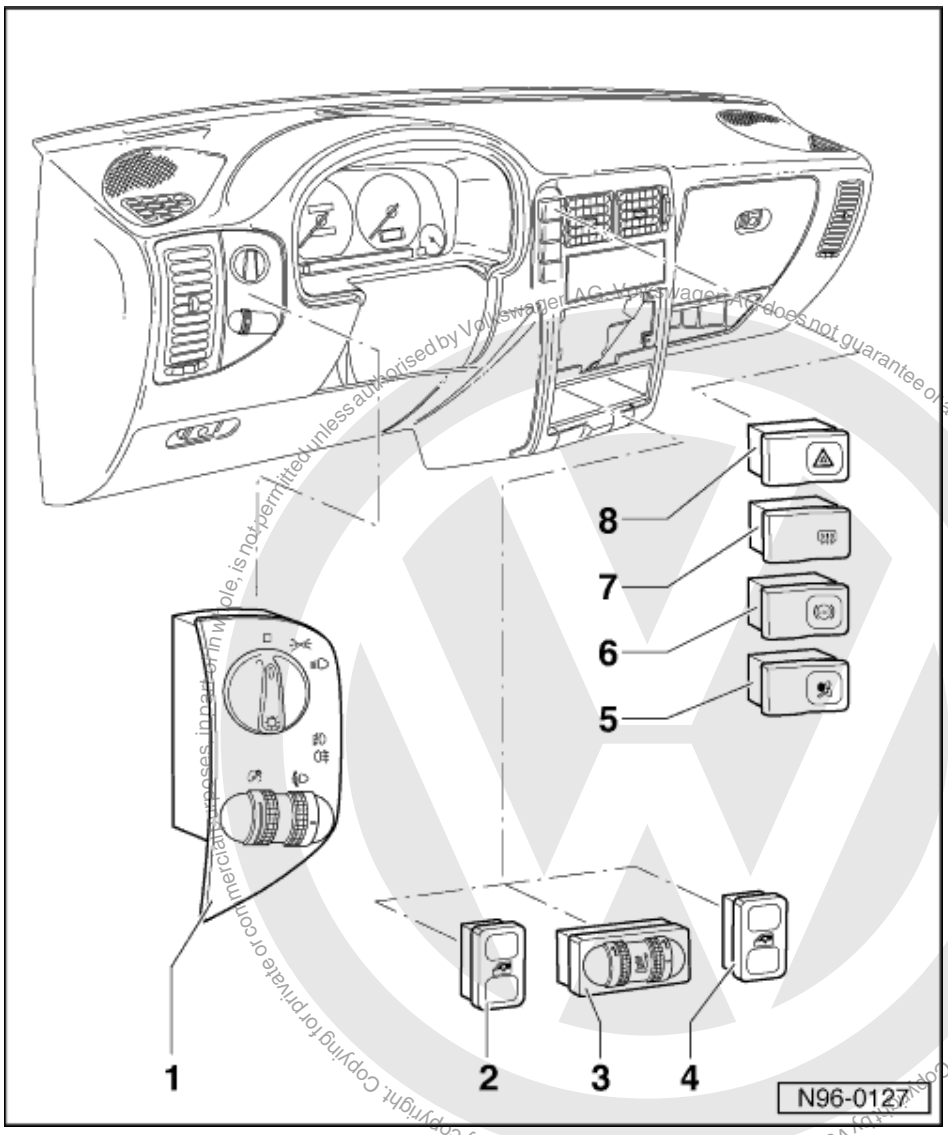


3 Switch with regulator for heated driver's seat -E94- and switch with regulator for heated front passenger seat -E95-
- Removing and installing => Page 212

4 Front right window switch -E41-
- Removing and installing => Page 212

5 Airbag warning lamp -K75-
- Removing and installing => Page 212

6 ABS warning lamp -K47-
- Removing and installing => Page 212

satelettronica

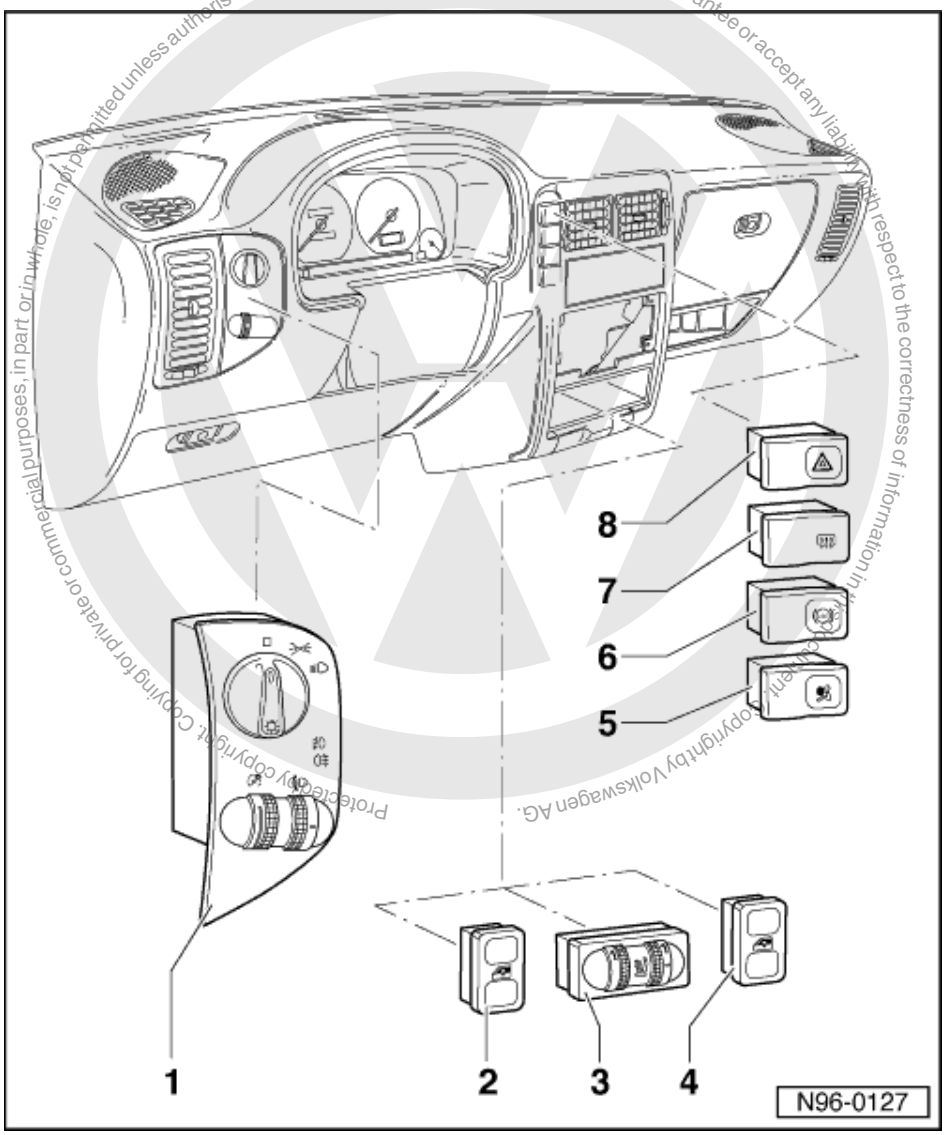


7 Heated rear window switch -E15-
- Removing and installing => Page 212

8 Hazard warning light switch -E3-
- Removing and installing => Page 212

Protected by copyright. Copying for private or commercial purposes, in part or in whole, is not permitted unless authorised by Volkswagen AG. Volkswagen AG does not guarantee or accept any liability with respect to the correctness of information in this document. Copyright by Volkswagen AG.
satelettronica

## 2.3 - Removing and installing switches in dash panel, vehicles 10.99 >

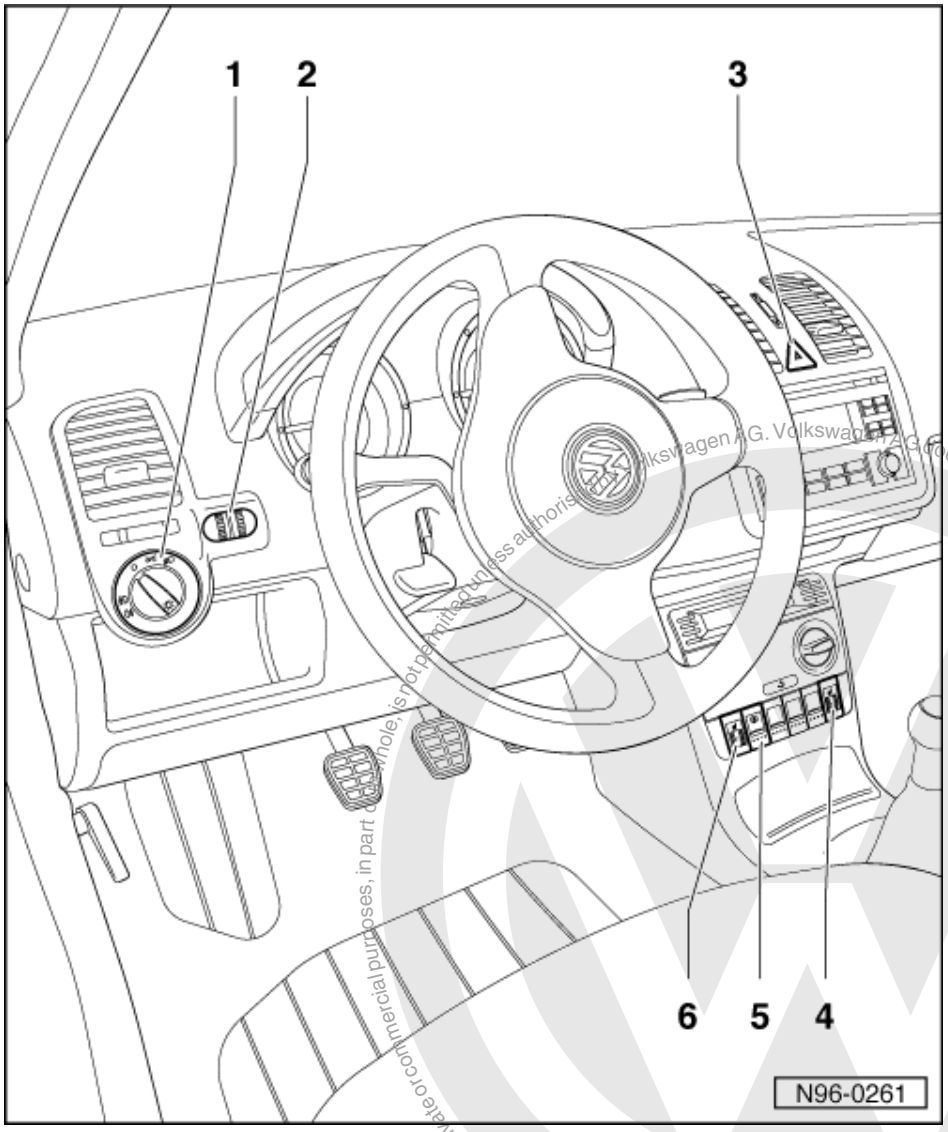


1 Lighting switch -E1-
- Removing and installing => Page 210

2 Headlight range control adjuster -E102- with regulator for switches and instrument illumination -E20-
- Removing and installing => Page 211

3 Hazard warning light switch -E3-
- Removing and installing => Page 213

4 Switch with regulator for heated front passenger seat -E95-
- Removing and installing => Page 212

Protected by copyright. Copyright by Volkswagen AG.
Volkswagen AG. Volkswagen AG does not guarantee or accept any liability with respect to the correctness of information in this document. Copying for private or commercial purposes, in part or whole, is not permitted unless authorised
satelettronica

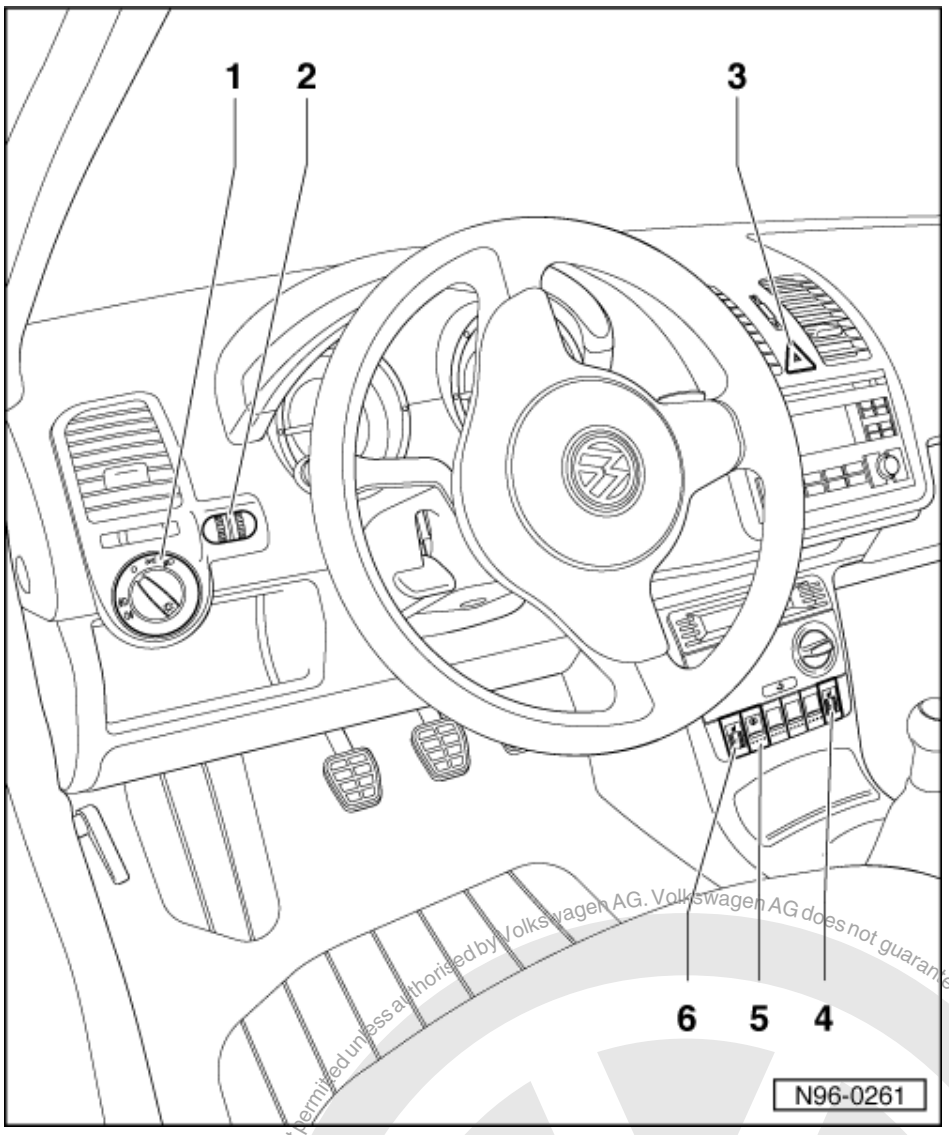


5 Heated rear window switch -E15-
- Removing and installing => Page 212

6 Switch with regulator for heated driver's seat -E94-
- Removing and installing => Page 212

Protected by copyright. Copying for private or commercial purposes, in part or in whole is not permitted unless authorised by Volkswagen AG. Volkswagen AG does not guarantee or accept any liability with respect to the correctness of information in this document. Copyright by Volkswagen AG.
satelettronica

## 2.4 - Removing and installing lighting switch, vehicles > 09.99

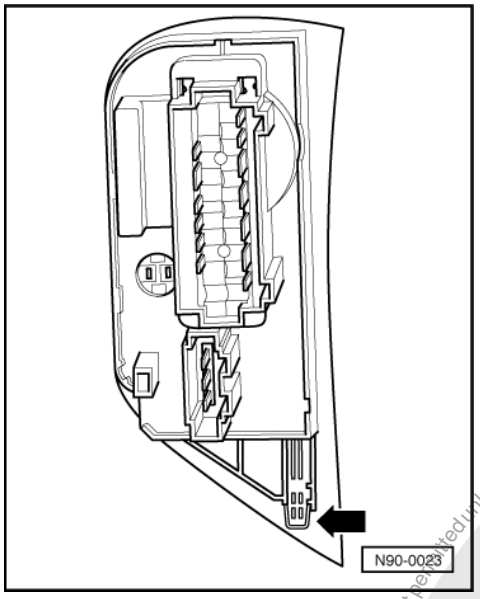


Removing:

- Removing and installing driver's side shelf:

=> General body repairs; Repair group 68

- -> Press lower retainer -arrow- upwards
- Pull light switch out of dash panel.
- Pull off connector.

Installing:

- Push on connector.
- Insert lighting switch in dash panel and locate correctly.
- Install driver's side shelf

## 2.5 - Removing and installing lighting switch, vehicles 10.99 >

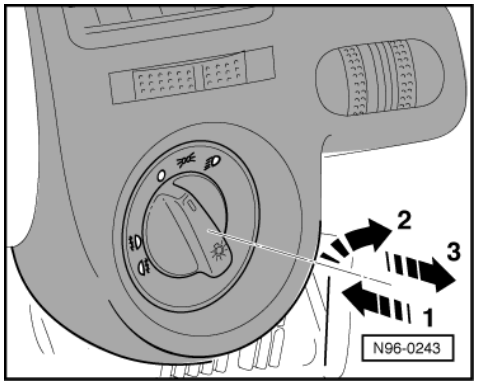


Removing:

Carry out work sequence as follows:

- Turn lighting switch rotary control to position '0'.
- -> Press the rotary control of the light switch in -1- and turn to the right slightly -2-.
- Hold rotary control in this position and pull light switch using rotary control out of dash panel -3-.

Protected by copyright. Copying for private or commercial purposes, in part or in whole, is not permitted unless authorised by Volkswagen AG. Volkswagen AG does not guarantee or accept any liability with respect to the correctness of information in this document. Copyright by Volkswagen AG.
satelettronica

- Release connector and pull off.

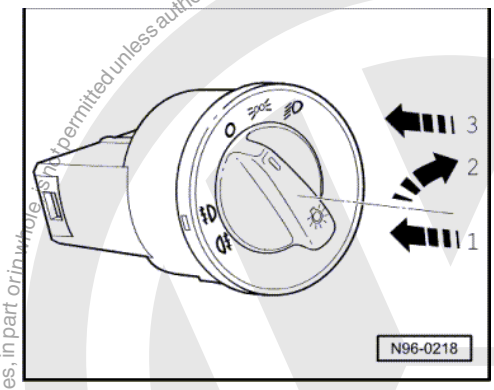


Installing:

Push on connector.
- -> Hold light switch and push the rotary control of the light switch in -1- and turn to the right slightly -2-.
- Hold rotary control in this position and insert light switch into dash panel -3-.
- Turn rotary control to position '0', release and engage switch.

## 2.6 - Removing and installing headlight range control adjuster -E102- with regulator for switches and instruments illumination -E20-, vehicles 10.99 >

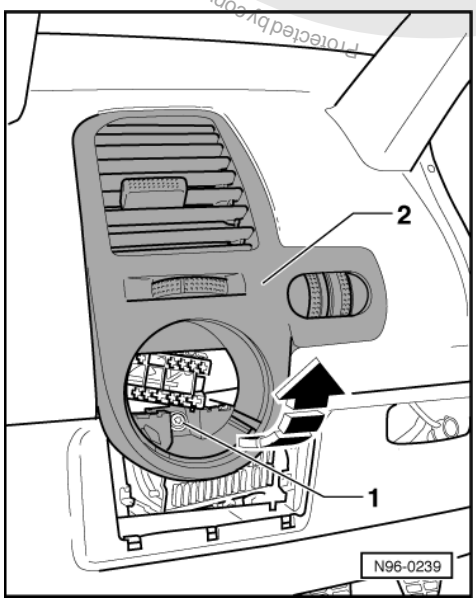


Removing:

- Remove lighting switch => Page 210 .
- -> Remove screw -1 - and swing cover with ventilation grille -2- out of dash panel in direction of arrow.
- Pull off connector

Protected by copyright. Copyright by Volkswagen AG. Volkswagen AG does not guarantee or accept any liability with respect to the correctness of information in this document. Copy not permitted unless authorised by Volkswagen AG. Volkswagen AG. Not permitted unless authorised. Not for commercial purposes, in part or in whole.
satelettronica

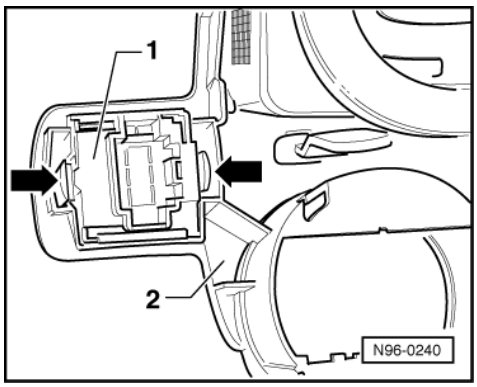


- -> Press locking lugs together -arrows- and pull adjuster -1- out of cover -2-.

**Installing:**

Install in reverse order.

## 2.7 - Removing and installing switches in centre of dash panel, vehicles > 09.99

Removing and installing is the same for all switches and only the heated rear window switch -E5- is described here.

**Removing:**

- Heated rear window switch -E15-

- Insert screwdriver on right side of switch between dash panel and switch and loosen carefully
- Pull off connector

**Installing:**

- Push on connector
- Push switch into mounting in dash panel and ensure properly located

## 2.8 - Removing and installing switches in centre of dash panel, vehicles 10.99 >

Removing and installing the

- Heated rear window switch
- Heated seat adjuster
- Switch for other optional equipment

is the same for all switches and only the heated rear window switch is described.

**Removing:**

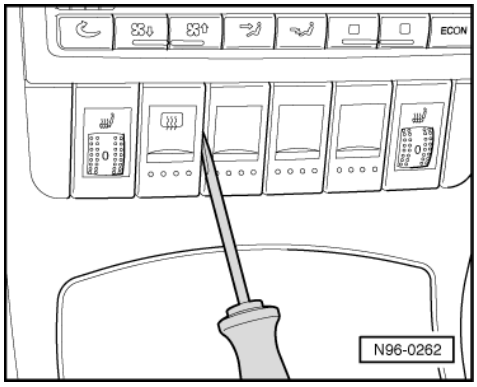


Protected by copyright. Copying for private or commercial purposes, in part or in whole, is not permitted unless authorised by Volkswagen AG. Volkswagen AG does not guarantee or accept any liability with respect to the correctness of information in this document. Copyright by Volkswagen AG.
satelettronica

- -> Insert flat point screwdriver between dash panel and switch and loosen switch carefully
- Take out switch to the front.
- Pull off connector

Installing:

Install in reverse order.

## 2.9 - Removing and installing hazard warning light switch -E3-, vehicles 10.99 >

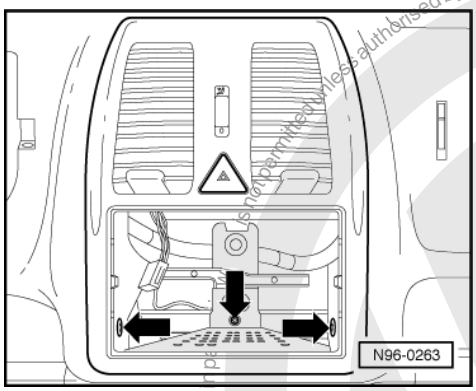


Removing:

- Remove radio or radio/navigation system.

=> Radio, Telephone, Navigation; Repair group 91

- -> Remove Torx screws -arrows- and pull middle vent forwards slightly.
- Pull off connector.

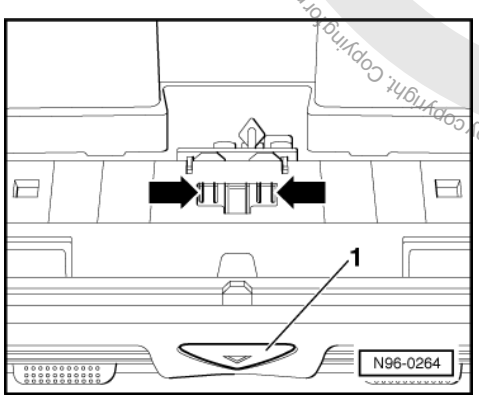


- -> Push down spring clip at lugs -arrows- and push out hazard warning light switch downwards.

Installing:

Install in reverse order.

Protected by copyright. Copying for private or commercial purposes, in part or in whole, is not permitted unless authorised by Volkswagen AG. Volkswagen AG does not guarantee or accept any liability with respect to the correctness of information in this document. Copyright by Volkswagen AG.
satelettronica

## 2.10 - Removing and installing interior light, vehicles 10.99 >

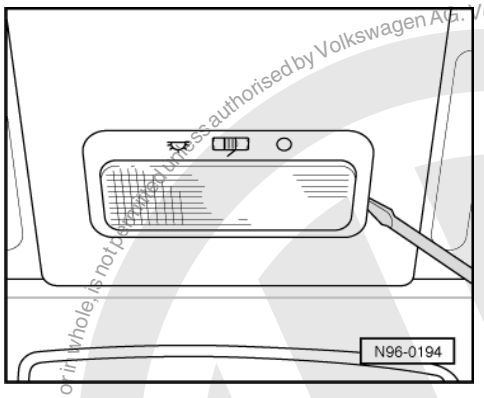


**Removing:**

- -> Lever interior light out of roof trim carefully using a flat blade screwdriver.
- Release connector and pull off.

**Installing:**

Install in reverse order.

**Changing interior light bulb:**

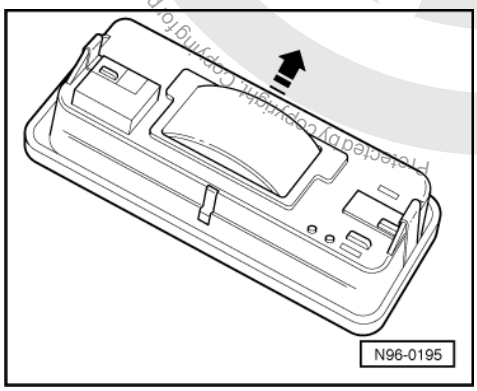


- Remove interior light.
- -> Release bulb cover by pressing sides and slide off to side -arrow-.
- Exchange 12V/10 W festoon bulb.

## 2.11 - Removing and installing sliding roof adjustment regulator -E139-, vehicles 10.99 >

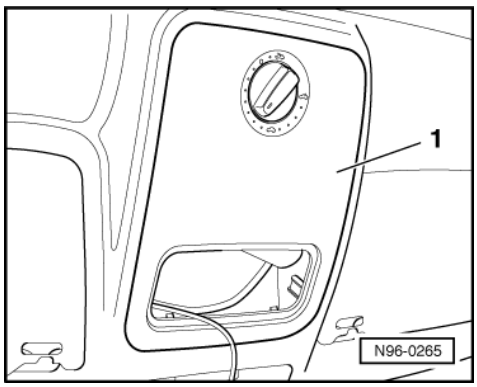


Protected by copyright. Copying for private or commercial purposes, in part or in whole, is not permitted unless authorised by Volkswagen AG. Volkswagen AG does not guarantee or accept any liability with respect to the correctness of information in this document. Copyright by Volkswagen AG.
satelettronica

**Removing:**

- Remove interior light => Page 214 .
- -> Remove cover -1- downwards.

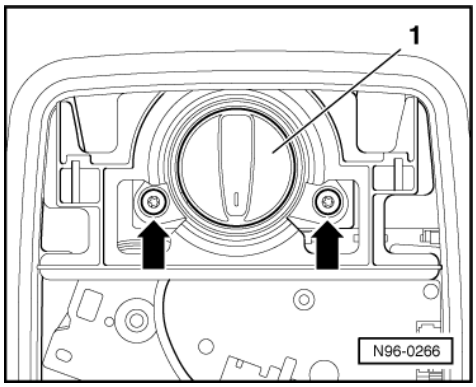


- -> Remove Torx screws -arrows- and remove sunroof control switch -1- downwards.
- Pull off connector

**Installing:**

Install in reverse order.

## 2.12 - Removing and installing window lifter switch, vehicles 10.99 >

**Removing and installing window lifter switches in driver's door**

**Removing:**

Carry out work sequence as follows:

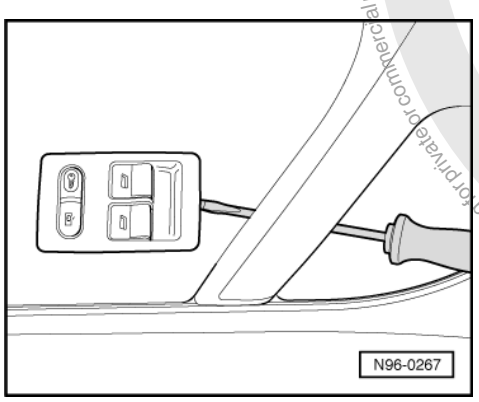


- -> Carefully release spring tension of switch housing with flat-point screwdriver and remove switch unit upwards.
- Pull off connector.
- Push out window lifter switch downwards from switch housing.

**Installing:**

Install in reverse order

**Removing and installing window lifter switches in front passenger's door and in both rear doors**

Removing and installing the

Protected by copyright. Copying for private or commercial purposes, in part or in whole, is not permitted unless authorised by Volkswagen AG. Volkswagen AG does not guarantee or accept any liability with respect to the correctness of information in this document. Copyright by Volkswagen AG.
satelettronica

- Front right electric window switch -E41-
- Rear left electric window switch -E52-
- Rear right electric window switch -E54-

is the same for all switches and only the front right window lifter switch -E41- is described here.

Removing:

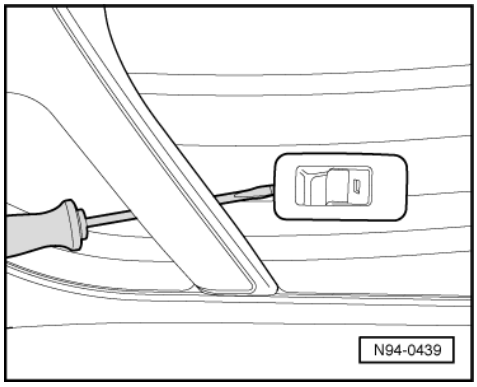


Carry out work sequence as follows:

- -> Carefully release spring tension of switch housing with flat-point screwdriver and remove switch unit upwards.
- Pull off connector
- Push out window lifter switch downwards from switch housing.

Installing:

Install in reverse order

## 2.13 - Removing and installing mirror adjustment switch -E43- with mirror adjustment change-over switch -E48-, vehicles 10.99 >

Removing:

Carry out work sequence as follows:

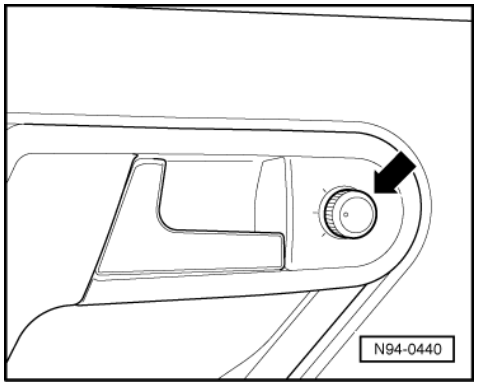


- -> Pull out mirror adjustment switch -arrow-.
- Pull off connector

Protected by copyright. Copying for private or commercial purposes, in part or in whole, is not permitted unless authorised by Volkswagen AG. Volkswagen AG does not guarantee or accept any liability with respect to the correctness of information in this document. Copyright by Volkswagen AG.
Satelettronica

**Installing:**

Install in reverse order

## 2.14 - Removing and installing door contact switch, vehicles 10.99 >

Removing and installing the

- Front left door contact switch -F2-
- Front right door contact switch -F3-
- Rear left door contact switch -F10-
- Rear right door contact switch -F11-

is the same for all switches and only the front right window lifter switch -F3- is described here.

**Removing:**

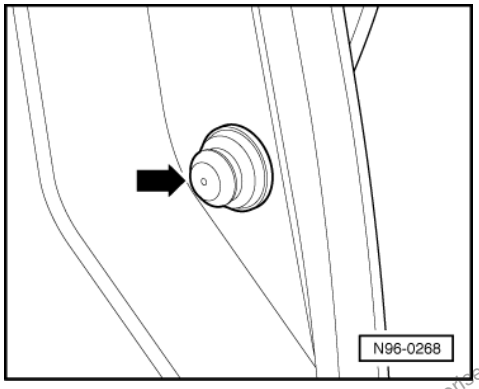


- -> Pull off rubber seal -arrow-.

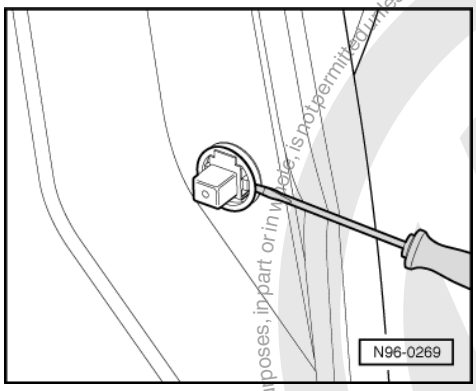


- Carefully release spring tension of door contact switch with flat-point screwdriver and remove switch forwards.
- Pull off connector

**Installing:**

Install in reverse order

Protected by copyright. Copying for private or commercial purposes, in part or in whole, is not permitted unless authorised by Volkswagen AG. Volkswagen AG does not guarantee or accept any liability with respect to the correctness of information in this document. Copyright by Volkswagen AG.
satelettronica

# 97 - Wiring

## 1 - Removing and installing relay plate, coupling station and fuse holder

### 1.1 - Removing and installing relay plate, coupling station and fuse holder

Protected by copyright. Copyright by Volkswagen AG. Volkswagen AG does not guarantee or accept any liability with respect to the correctness of information in this document. Copyright by Volkswagen AG. Copying for private or commercial purposes, in part or in whole, is not permitted unless authorised by Volkswagen AG.

Warning!
Before working on the electrical system disconnect the battery earth strap.

*Notes:*

- If the vehicle has a security-coded radio, obtain the correct anti-theft code number before disconnecting the battery.
- When the battery is reconnected, check operation of electrical equipment (radio, clock and electric window lifters) according to Workshop Manual or Owner's Manual.

### 1.2 - Removing and installing relay plate, vehicles > 1997

- Removing and installing driver's side shelf:

=> General body repairs; Repair group 68

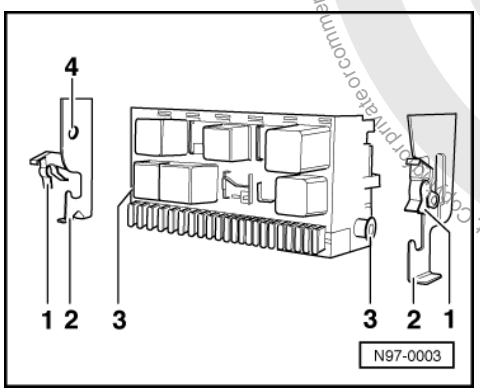


- -> Release securing clips -1- from pins -3- on left and right of relay plate and swing upwards.
- Push left retainer -2- outwards until the rotary catch on the relay plate has been pulled out of the hole in the retaining plate -4-. Then unhook relay plate.

When installing the relay plate rotating catch must engage in the hole of the retainer -4-. The securing clips -1- must be located on the pins -3-.

satelettronica

## 1.3 - Removing and installing multi-pin plug behind relay plate, vehicles > 1997

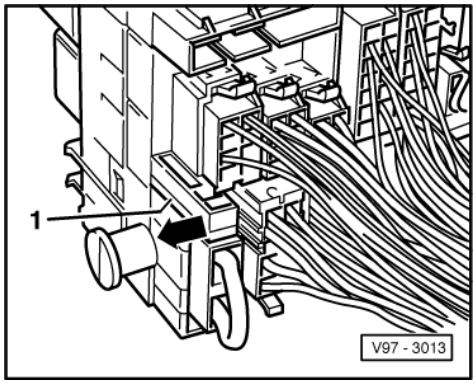


*Note:*

*Multi-pin connector pin assignment*

=> Current flow diagrams, Electrical fault finding and Fitting locations.

### Removing multi-pin plug

- -> Pull the retaining slide -1- on rear of relay plate out of the housing -arrow- as far as possible (about 5 mm).

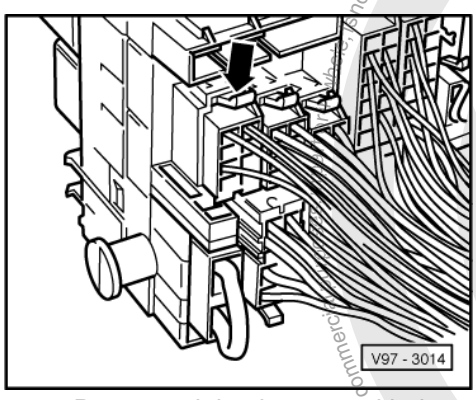


- -> Press retaining lug on multi-pin connector -arrow- and pull out of relay plate.

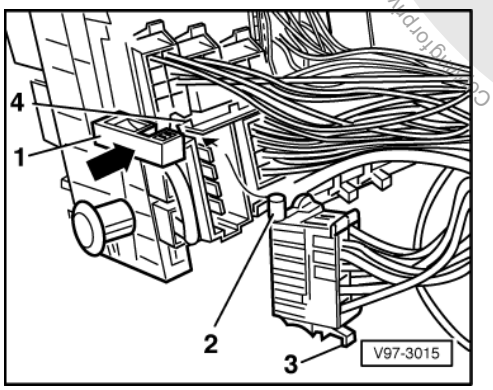


Protected by copyright. Copying for private or commercial purposes, in part or in whole, is not permitted unless authorised by Volkswagen AG. Volkswagen AG does not guarantee or accept any liability with respect to the correctness of information in this document. Copyright by Volkswagen AG.
satelettronica

-> Installing multi-pin connector

*Note:*

*Insert connector so that the locking pin -2- face towards locking slide -1-.*

- Push multi-pin connector into appropriate location as far as stop with locking pin -2- located in recess -4- until retaining tab -3- engages.
- Push locking slide -1- against stop -arrow-; This is only possible when all multi-pin connectors are pushed in until the retaining tabs -3- are engaged.

## 1.4 - Removing and installing fuse holder and relay carrier, vehicles 1998 >09.99

1998 ▸vehicles are equipped with two fuse holders. One fuse holder is located in front left footwell the other fuse holder is located on the battery.

## 1.5 - Removing and installing coupling station with relay carrier in front left footwell, vehicles 1998 >09.99

Carry out work sequence as follows:

- Remove dash panel trim in driver's footwell:

=> General body repairs; Repair group 70

- Release locking devices on all multi-pin connections and separate connections.
- Pull out relays and control units.
- Release all wiring screwed connections on underside.
- Remove both securing screws.

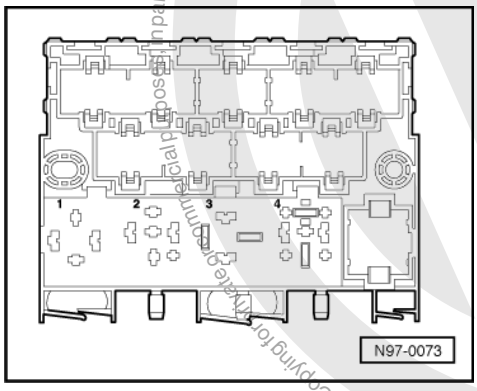


- -> Take coupling station with relay carrier out downwards.

## 1.6 - Removing and installing fuse holder in front left footwell, vehicles 1998 >09.99

Carry out work sequence as follows:

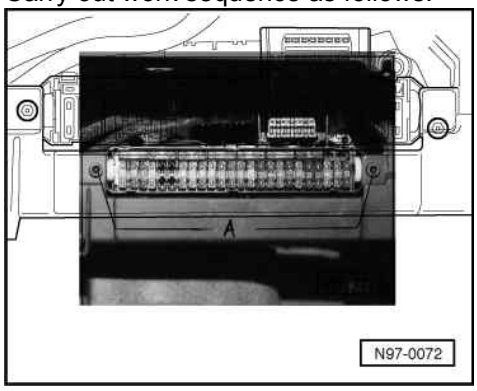


Protected by copyright. Copying for private or commercial purposes, in part or in whole, is not permitted unless authorised by Volkswagen AG. Volkswagen AG does not guarantee or accept any liability with respect to the correctness of information in this document. Copyright by Volkswagen AG.
satelettronica

Copyright by Volkswagen AG. Volkswagen AG does not guarantee or accept any liability with respect to the correctness of information in this document. Copyright by Volkswagen AG. Commercial purposes, in part or in whole, is not permitted unless authorised by Volkswagen AG.

- Remove dash panel trim in driver's footwell:

=> General body repairs; Repair group 70

- -> Remove both securing screws -A-.

## 1.7 - Removing and installing relay plate, vehicles 10.99 >

**Removing:**

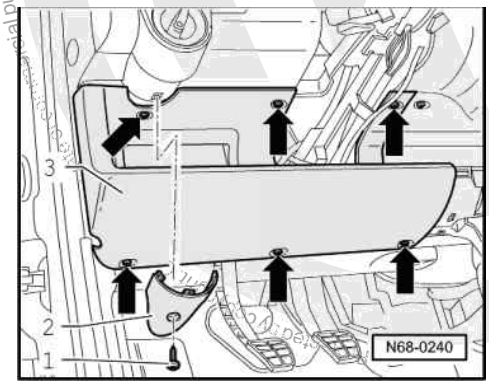


- -> Remove screw -1- and take off cover -2-.
- Remove driver's stowage compartment -3- securing screws -arrows-.
- Take out driver's stowage compartment -3-.

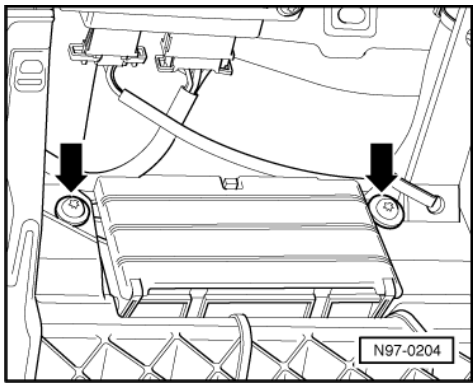


- -> Remove screws-arrows- which secure the fuse holder.

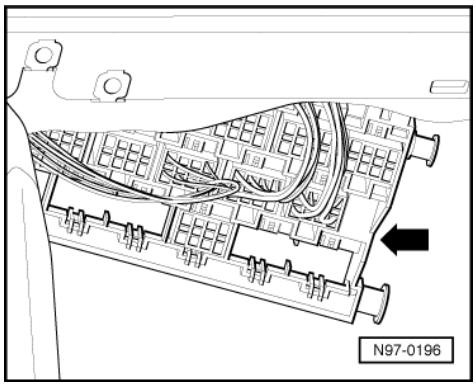


- -> Unhook coupling station -arrow- below relay station and pull down slightly.
- Disconnect all multi-pin connections.

satelettronica

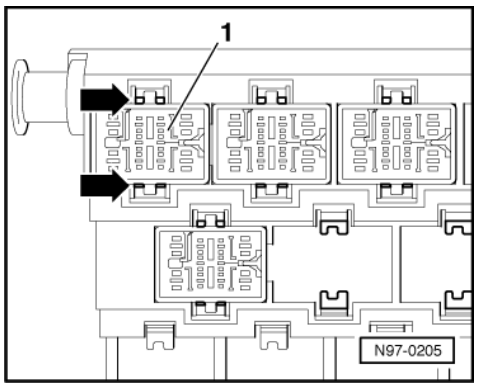


- -> To unclip multi-pin connector, release retaining lugs -arrows- and push out connector -1- backwards out of coupling station.
- Take coupling station out downwards.

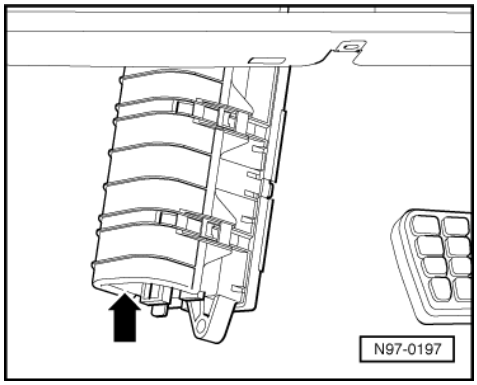


- Separate cable ties on fuse holder wiring harness.
- -> Pull fuse holder -arrow- downwards slightly.

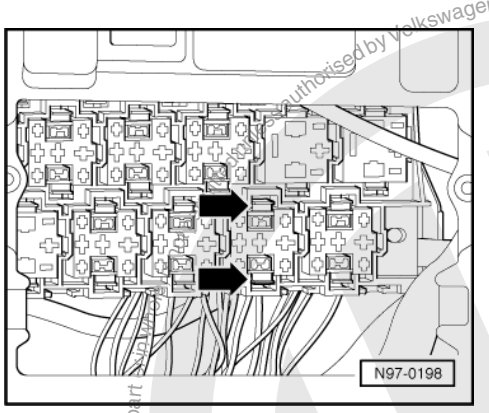


- Pull relays and control units off relay plate.
- -> Press retaining lugs -arrows- outwards and press relay socket to rear out of relay plate.

Protected by copyright. Copying for private or commercial purposes, in part, is not permitted unless authorised by Volkswagen AG. Volkswagen AG does not guarantee or accept any liability with respect to the correctness of information in this document. Copyright by Volkswagen AG.

satelettronica

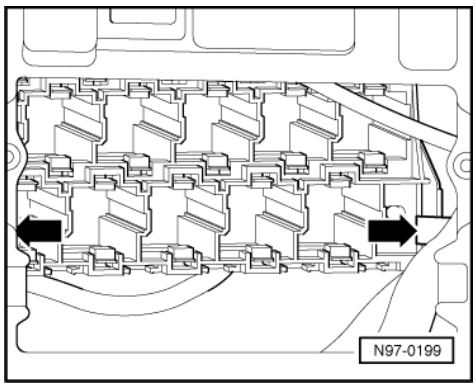


- -> Unclip relay plate on left and right-hand sides -arrows-.
- Take relay plate out downwards.

Installing:

- Insert relay plate and clip in position on left and right sides -arrows-.
- Insert relay socket into relay plate from behind and engage.

*Note:*

*Multi-pin connector pin assignment*

=> Current flow diagrams, Electrical fault finding and Fitting locations.

- Install relay and control unit.

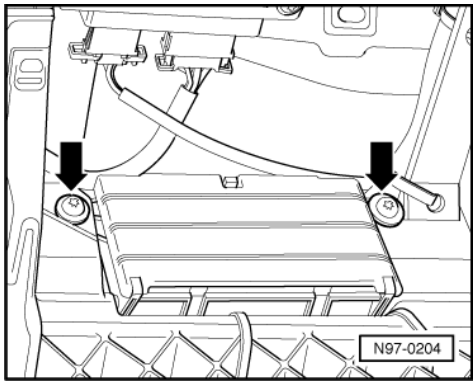


- -> Insert fuse holder and secure with screws -arrows-.
- Install multi-pin connector and clip in the coupling station.

*Note:*

*Multi-pin connector pin assignment*

=> Current flow diagrams, Electrical fault finding and Fitting locations.

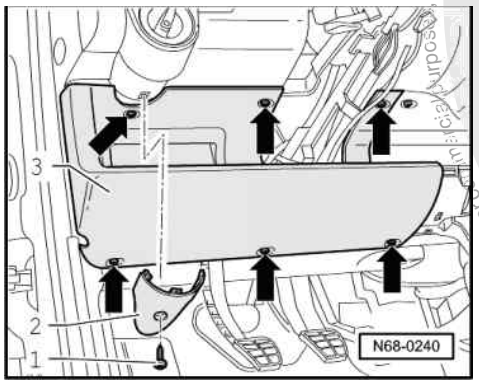


Protected by copyright. Copying for private or commercial purposes, in part or in whole, is not permitted unless authorised by Volkswagen AG. Volkswagen AG does not guarantee or accept any liability with respect to the correctness of information in this document. Copyright by Volkswagen AG.
satelettronica

- -> Install out driver's stowage compartment -3-.
- Tighten driver's stowage compartment -3- securing screws -arrows-.
- Install cover -2- and tighten screw -1-.

## 1.8 - Removing and installing multi-pin plug below relay plate, vehicles 10.99 >

Removing:

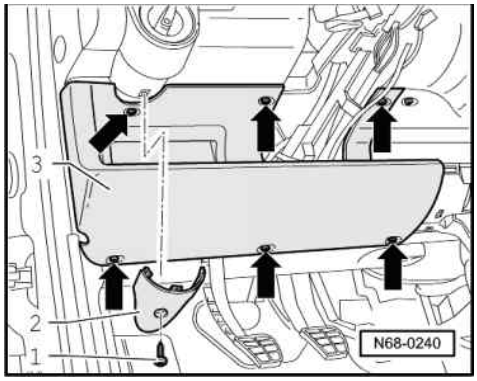


- -> Remove screw -1- and take off cover -2-.
- Remove driver's stowage compartment -3- securing screws -arrows-.
- Take out driver's stowage compartment -3-.

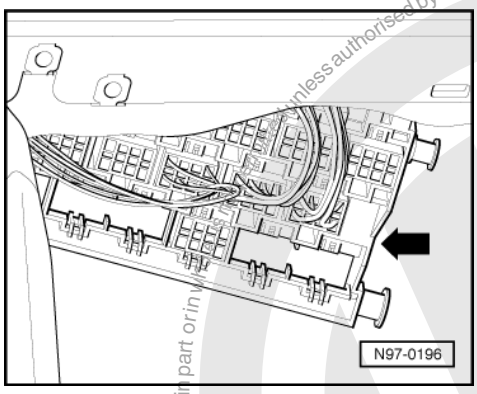


- -> Unhook coupling station -arrow- below relay station and pull down slightly.
- Disconnect all multi-pin connections.

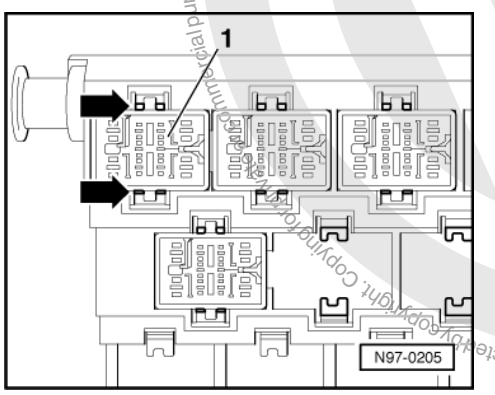


- -> To unclip multi-pin connector, release retaining lugs -arrows- and push out connector -1- backwards out of coupling station.
- Take coupling station out downwards.

Protected by copyright. Copyright by Volkswagen AG.
Copying for commercial purposes, in part or in whole, is not permitted unless authorised by Volkswagen AG. Volkswagen AG does not guarantee or accept any liability with respect to the correctness of information in this document.
satelettronica

Installing:

- Install multi-pin connector and clip in coupling station.

*Note:*

*Multi-pin connector pin assignment*

=> Current flow diagrams, Electrical fault finding and Fitting locations.

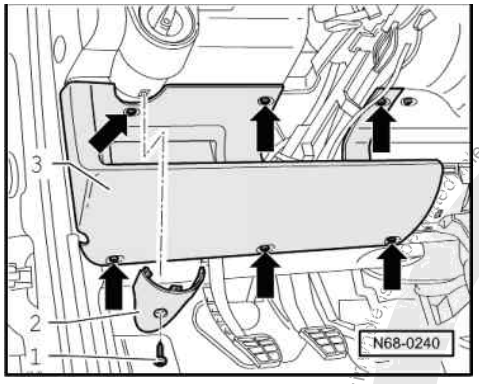


- -> Install out driver's stowage compartment -3-.
- Tighten driver's stowage compartment -3- securing screws -arrows-.
- Install cover -2- and tighten screw -1-.

## 1.9 - Removing and installing fuse holder in front left footwell, vehicles 10.99 >

Removing:

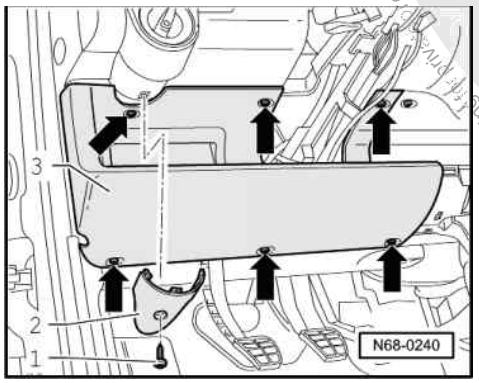


- -> Remove screw -1- and take off cover -2-.
- Remove driver's stowage compartment -3- securing screws -arrows-.
- Take out driver's stowage compartment -3-.

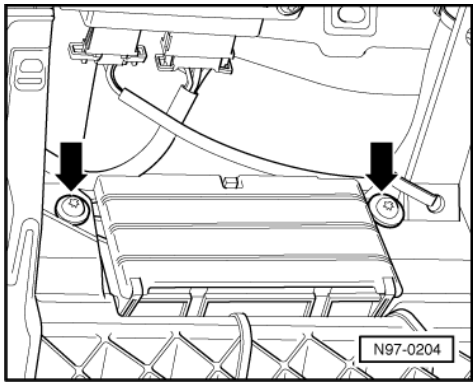


Protected by copyright. Copyright by Volkswagen AG. Volkswagen AG does not guarantee or accept any liability with respect to the correctness of information in this document. Copyright by Volkswagen AG.
satelettronica

- -> Remove screws -arrows- which secure the fuse holder.

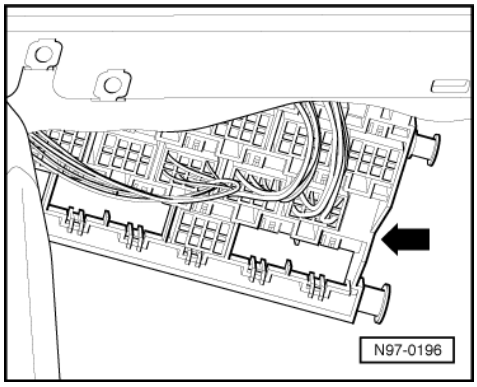


- -> Unhook coupling station -arrow- below relay station and pull down slightly.
- Disconnect all multi-pin connections.

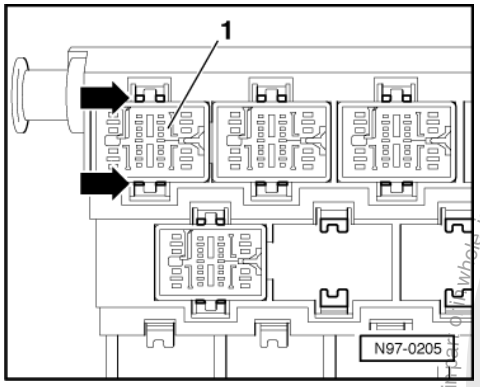


- -> To unclip multi-pin connector, release retaining lugs -arrows- and push out connector -1- backwards out of coupling station.
- Take coupling station out downwards.

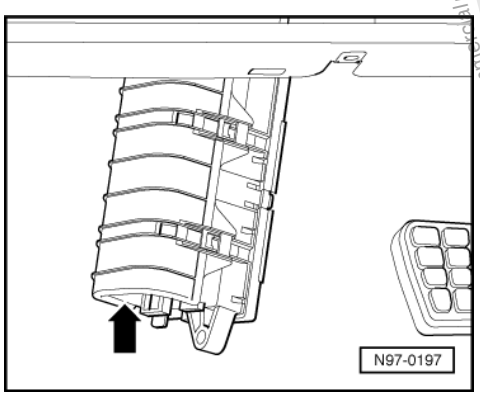


- -> Pull fuse holder -arrow- downwards slightly.

Protected by copyright. Copying for private or commercial purposes, in part or in whole, is not permitted unless authorised by Volkswagen AG. Volkswagen AG does not guarantee or accept any liability with respect to the correctness of information in this document. Copyright by Volkswagen AG.
satelettronica

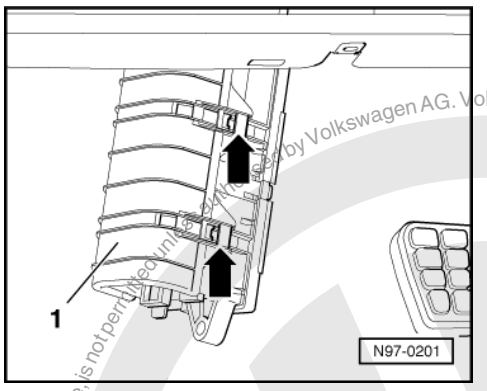


- -> Press retaining lugs -arrows- together and take off the cover cap -1-.

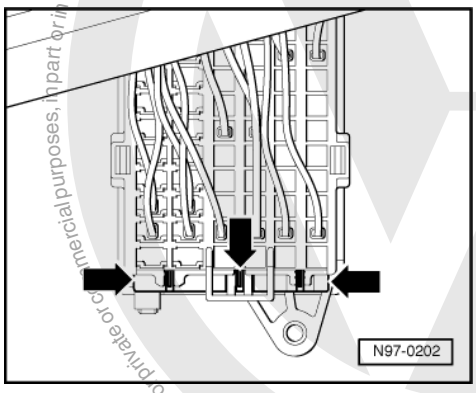


- Take fuses out of fuse holder.
- -> Pull locking slide -arrows- on the back of the fuse holder out of housing onto stop.
- Pull wiring out of fuse holder.

**Installing:**

Install in reverse order.

***Note:***

*Multi-pin connector pin assignment*

=> Current flow diagrams, Electrical fault finding and Fitting locations.

Protected by copyright by Volkswagen AG. Volkswagen AG does not guarantee or accept any liability with respect to the correctness of information in this document. Copyright by Volkswagen AG.
Protected by copyright. Copying for private or commercial purposes, in part or in whole, is not permitted unless authorised by Volkswagen AG.
satelettronica

# 2 - Wiring harness and connector repairs

## 2.1 - Wiring harness and connector repairs

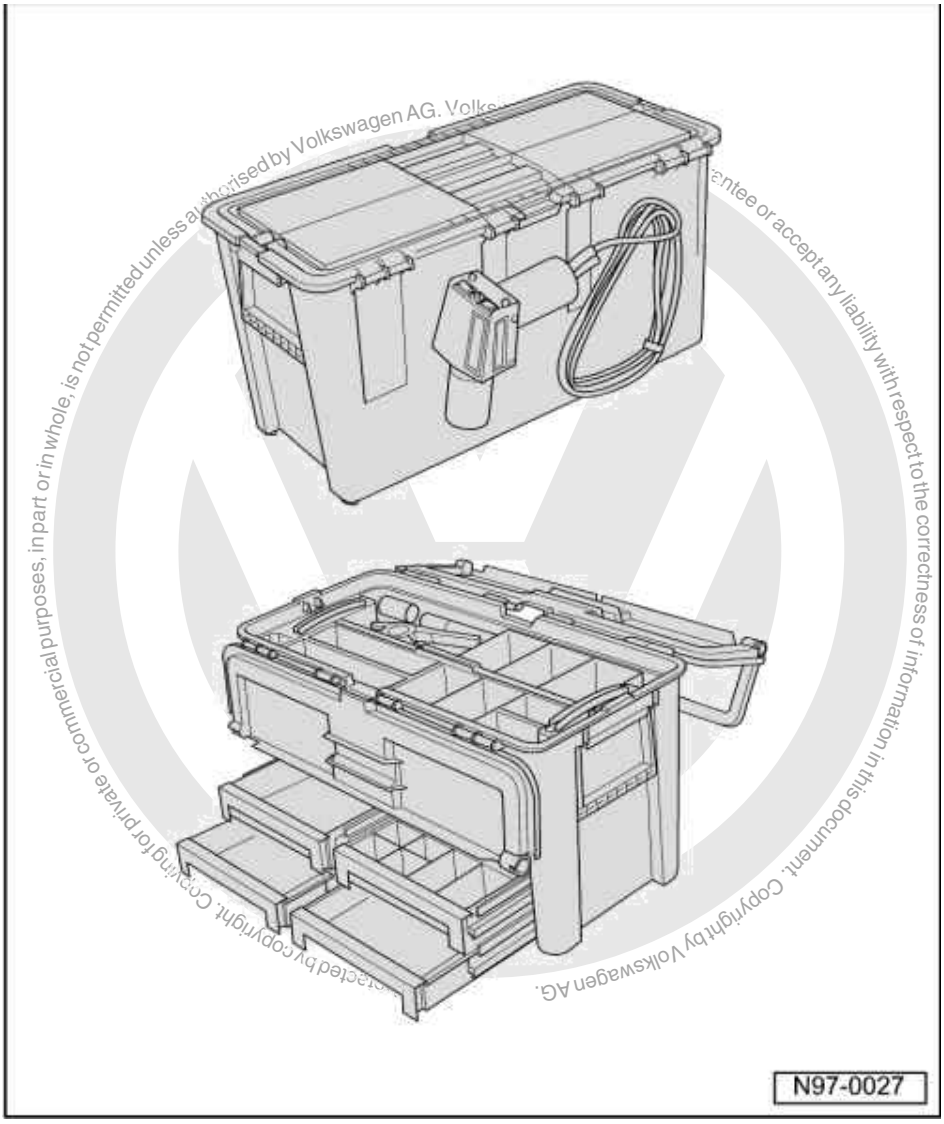


satelettronica

**Wiring harness and connector repairs to the vehicle electrical system must only be undertaken with Repair set VAS 1978!**

Wiring harness repair set

VAS 1978

An instruction manual is included in the wiring harness Repair set VAS 1978, in which the procedure for repairs are described in great detail.

Observe the following remarks concerning repairs.

## Notes concerning wiring harness and connector repairs

Warning!
Disconnect battery earth strap before starting work on electrical system!
Screened wires may not be repaired. These wires must be replaced complete if damaged.
When repairing airbag wiring harness use only the prescribed contacts, connectors and wires Parts catalogue.
The cause of the damage must be rectified before starting repairs, e.g. sharp edged body parts, defective electrical consumers, corrosion etc.
Wiring repairs may only be undertaken using yellow wiring.
Yellow wiring and locations with yellow insulating tape on wiring harness designate a previous repair!
Perform a functional check after each repair and erase fault memories or perform basic settings if necessary.

Protected by copyright. Copying for private or commercial purposes, in part or in whole, is not permitted unless authorised by Volkswagen AG. Volkswagen AG does not guarantee or accept any liability with respect to the correctness of information in this document. Copyright by Volkswagen AG.
satelettronica